JUKI®

1-Needle Double Chainstitch Eyelet Button-Holing Industrial Sewing Machine with Needle Thread Trimmer

高速一本針二重環縫鳩目穴かがりミシン（針糸切り付）

MEB-2688

PARTS LIST

HOW TO MAKE USE OF THIS PARTS LIST

1. As to "#01" and "#02" refer to the "Note" given at the bottom of the respective pages.
2. Codes on the "Qty" column
   - Each numeral indicates the number of parts required.
   - "0.1" and "2.5" indicate the length (in meters) of the respective parts.
3. Parentheses mean that the corresponding part is a subpart that constructs an assembly part.
4. Dotted lines on the Figures indicate assembly parts.

パーツリストご利用に際して

1. リストページの#01、#02 等の印は、ページ下の"注記"の説明をご参照下さい。
2. 数量欄の数字は、個数を表し、0.1、2.5等の数値は、長さ（単位メートル）を表します。
3. 数量欄の（ ）は、組部品を構成している子部品であることを意味します。
4. イラストページの－－－－－枠は、組構成であることを意味します。

CONTENTS

目　　次

1. FRAME & MISCELLANEOUS COVER COMPONENTS(1) 1
頭部・外装関係（1）
2. FRAME & MISCELLANEOUS COVER COMPONENTS(2) 3
頭部・外装関係（2）
3. NEEDLE BAR COMPONENTS(1) 5
針棒関係（1）
4. NEEDLE BAR COMPONENTS(2) 7
針棒関係（2）
5. CLAMPING COMPONENTS(1) 9
クランプ関係（1）
6. CLAMPING COMPONENTS(2) 11
クランプ関係（2）
7. MAIN SHAFT COMPONENTS 13
主軸関係
8. UPPER SHAFT COMPONENTS 15
上軸関係
9. FEED MECHANISM COMPONENTS 17
送り関係
10. LOOPER DRIVE COMPONENTS(1) 19
ルーパー駆動関係（1）
11. LOOPER DRIVE COMPONENTS(2) 21
ルーパー駆動関係（2）
12. MAIN CAM & PATTERN CAM COMPONENTS 23
主カム・パターンカム関係
13. KNIFE COMPONENTS 25
メス関係
14. THREAD TAKE-UP LEVER & THREAD GUIDE COMPONENTS(1) 27
天秤・糸案内関係（1）
15. THREAD TAKE-UP LEVER & THREAD GUIDE COMPONENTS(2) 29
天秤・糸案内関係（2）
16. THREAD TRIMMER COMPONENTS 31
糸切り関係
17. LUBRICATION MECHANISM COMPONENTS 33
給油関係
18. MOTOR PULLY COMPONENTS 35
モータプーリ関係
19. MOTOR PULLY COVER COMPONENTS 37
モータプーリカバー関係
20. SAFETY PLATE COMPONENTS 39
安全プレート関係

21. MOTOR & POWER SOURCE SWITCH COMPONENTS 41
モータ・電源スイッチ関係
22. SYNCHRONIZER & SOLENOID COMPONENTS 43
シンクロナイザー・ソレノイド関係
23. SENSOR & SEWING MACHINE PANEL COMPONENTS 45
センサー・ミシンパネル関係
24. THREAD RAISING DEVICE COMPONENTS 47
糸立装置関係
25. TABLE COMPONENTS 49
脚卓関係
26. TRANSMISSION BOX COMPONENTS 51
電装ＢＯＸ関係
27. FOOT PEDAL COMPONENTS (OPTION) 53
足踏みペダル関係（オプション）
28. FOOT START PEDAL COMPONENTS (OPTION) 55
足踏みスタートペダル関係（オプション）
29. TABLE OF EXCHANGING GAUGE PARTS & OPTION (1) 57
交換ゲージ・オプション一覧表（１）
30. TABLE OF EXCHANGING GAUGE PARTS & OPTION (2) 58
交換ゲージ・オプション一覧表（２）
31. TABLE OF EXCHANGING GAUGE PARTS & OPTION (3) 59
交換ゲージ・オプション一覧表（３）
NUMERICAL INDEX OF PARTS 60
索引

頭部・外装関係（1）

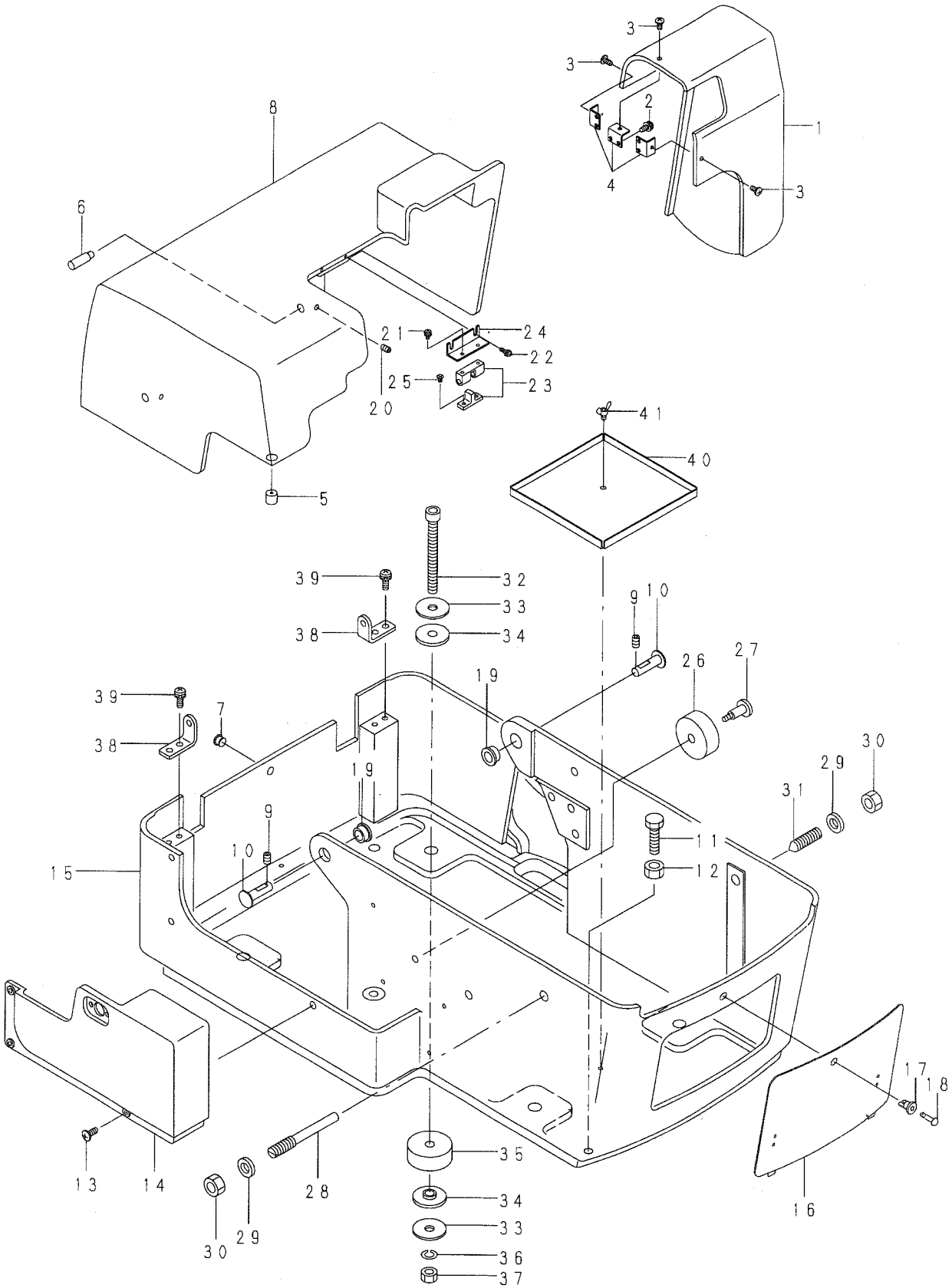

1
2
3
4
5
6
7
8
9
10
11
12
13
14
15
16
17
18
19
20
21
22
23
24
25
26
27
28
29
30
31
32
33
34
35
36
37
38
39
40
41

REF. NO	NOTE	PART NO.	D E S C R I P T I O N	ヒ ン メ イ	Qty
1		140-02703	PULLEY COVER	ﾌﾟｰﾘｰｶﾊﾞｰ	1
2		SL-4041091-SC	SCREW M4 X 10	ﾅﾍﾞｺﾈｼﾞ ｾﾑｽ M4X0.7 L=10	6
3		SM-0040801-SC	SCREW	ﾄﾗｽﾈｼﾞ M4 L=8	3
4		140-02802	PULLEY COVER STOPPER	ﾌﾟｰﾘｰｶﾊﾞｰﾄﾒｲﾀ	3
5		B1114-180-000	RUBBER PAD	ﾍﾞｯﾄﾞ ｳｹﾀﾞｲｻﾞ ｺﾞﾑ	1
6		140-02505	REAR COVER FULCRUM SHAFT	ｺｳﾌﾞｶﾊﾞｰｼﾃﾝｼﾞｸ	2
7		TA-0750505-R0	PLUG	ﾄﾒｾﾝ	1
8		140-02406	REAR COVER	ｺｳﾌﾞｶﾊﾞｰ	1
9		SM-8061002-TP	SCREW M6 L=10	ﾄﾒﾈｼﾞ M6 L=10	2
10		140-03602	FRAME FULCRUM SHAFT	ﾄｳﾌﾞｼﾃﾝｼﾞｸ	2
11		SM-9083003-SC	SCREW M8 L=30	ﾛｯｶｸﾎﾞﾙﾄ M8 L=30	1
12		NM-6080003-SC	NUT M8	ﾛｯｶｸﾅｯﾄ M8 3ｼｭ	1
13		SM-0051201-SC	SCREW	ﾄﾗｽﾈｼﾞ M5 L=12	4
14		140-02000	BOTTOM LEFT COVER	ﾎﾞﾄﾑﾋﾀﾞﾘｶﾊﾞｰ	1
15		140-01903	BOTTOM COVER	ﾎﾞﾄﾑｶﾊﾞｰ	1
16		140-02109	BOTTOM FRONT COVER	ﾎﾞﾄﾑﾏｴｶﾊﾞｰ	1
17		140-02208	WINDOW PLATE, C	ﾅｲﾗｯﾁ ｸﾞﾛﾒｯﾄ	1
18		140-02307	WINDOW PLATE, A	ﾅｲﾗｯﾁ ﾌﾟﾗﾝｼﾞｬｰ	1
19		140-03503	FRAME SUPPORT BUSHING	ﾄｳﾌﾞｼﾃﾝﾌﾞｯｼｭ	2
20		SM-8050812-TP	SCREW M5X8	ﾄﾒﾈｼﾞ M5X0.8 L=8	2
21		SL-4030691-SC	SCREW M3X6	ﾅﾍﾞｺﾈｼﾞ ｾﾑｽ M3X0.5 L=6	2
22		SL-4031091-SC	SCREW M3 X 10	ﾅﾍﾞｺﾈｼﾞ ｾﾑｽ	2
23		140-02901	BALL CATCH	ﾎﾞｰﾙｷｬｯﾁ	1
24		140-03008	BALL CATCH INSTALLING PLATE	ﾎﾞｰﾙｷｬｯﾁﾄﾘﾂｹｲﾀ	1
25		SM-1030501-SC	SCREW M3 L=5	ｻﾗｺﾈｼﾞ M3 L=5	2
26		140-03305	HEAD INVERTING STOPPER	ﾄｳﾌﾞﾊﾝﾃﾝｽﾄｯﾊﾟｰ	1
27		SD-0791501-SP	HINGE SCREW D= 7.94 H=15.0	ﾀﾞﾝﾈｼﾞ D=7.94 H=15	1
28		140-04907	SCREW	ｺﾃｲﾈｼﾞ ﾋﾀﾞﾘ	1
29		B2740-771-000	THRUST WASHER	ﾒｽ ｻﾄﾞｰ ｵｼﾎﾞｰｳｹ	2
30		NM-6100001-SC	NUT M10X1.5	ﾛｯｶｸﾅｯﾄ M10 1ｼｭ	2
31		140-04808	SCREW	ｺﾃｲﾈｼﾞ ﾐｷﾞ	1
32		SM-6088002-TP	SCREW	ﾛｯｶｸｱﾅﾎﾞﾙﾄ M8 L=80	4
33		WP-0852086-SC	WASHER M8	ﾋﾗｻﾞｶﾞﾈ	8
34		140-03701	BOLT CUSHION A	ﾄｳﾌﾞｺﾃｲﾎﾞﾙﾄｸｯｼｮﾝ (A)	8
35		140-03800	BOLT CUSHION B	ﾄｳﾌﾞｺﾃｲﾎﾞﾙﾄｸｯｼｮﾝ (B)	4
36		WS-0820002-KP	SPRING WASHER	ﾊﾞﾈｻﾞｶﾞﾈ M8	4
37		NM-6080001-SD	NUT M8X1.25	ﾛｯｶｸﾅｯﾄ M8 1ｼｭ	4
38		140-02604	REAR COVER INSTALLING PLATE	ｺｳﾌﾞｶﾊﾞｰﾄﾘﾂｹｲﾀ	2
39		SL-4051691-SC	SCREW M5X0.8 L=16	ﾅﾍﾞｺﾈｼﾞ ｾﾑｽ M5X0.8 L=16	4
40		140-03107	CLOTH WASTE CIVER	ﾇﾉｸｽﾞｶﾊﾞｰ	1
41		163-68508	WING BOLT	ﾃﾞﾝｼﾞﾍﾞﾝｶﾊﾞｰﾁﾖｳﾎﾞﾙﾄ	1

頭部・外装関係（２）

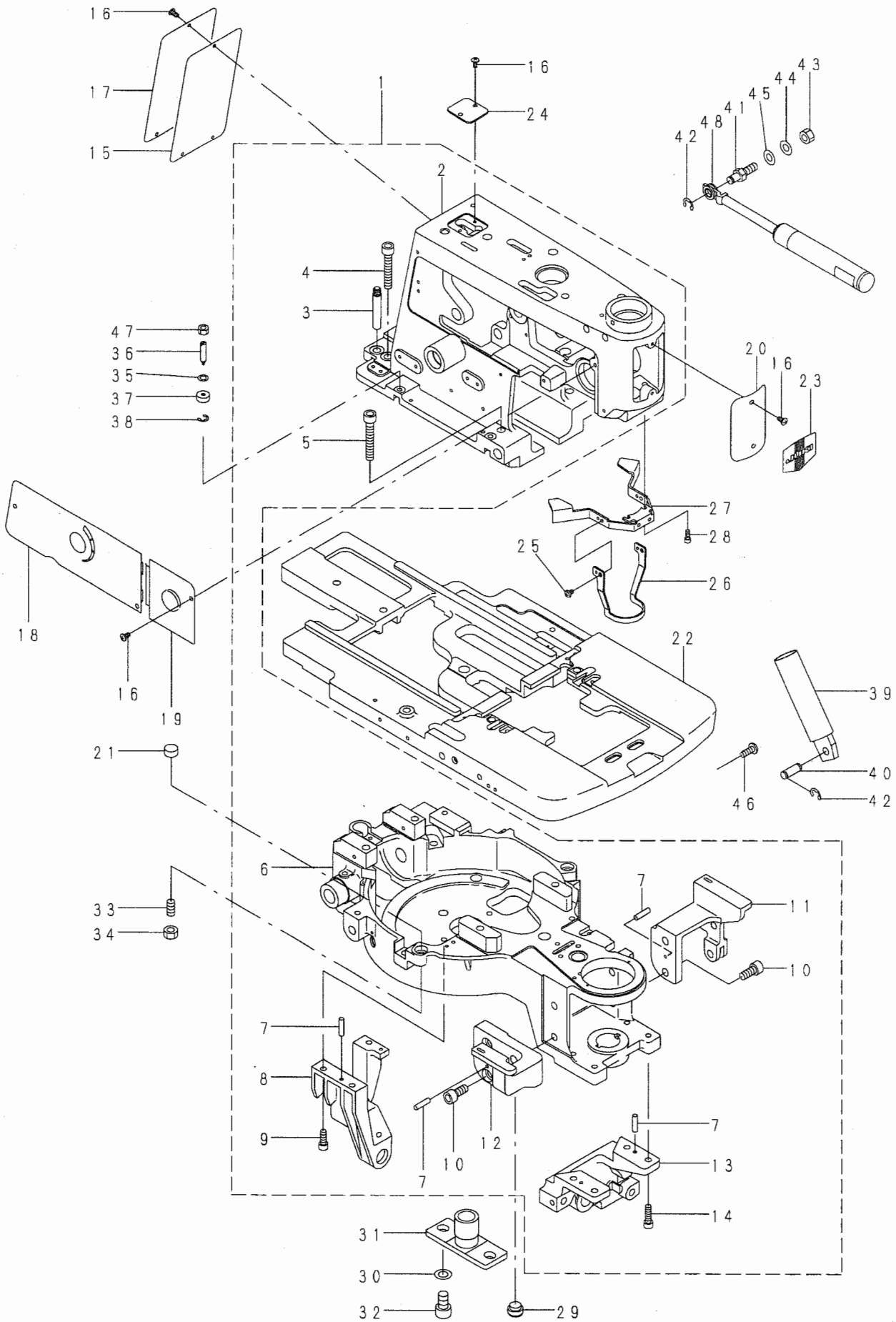
16
17
15
1
16
24
2
43
44
45
41
48
42
4
3
47
36
35
37
38
5
20
16
23
27
28
25
26
18
16
19
22
39
40
42
46
21
6
33
34
7
11
10
7
8
9
12
10
7
7
13
14
31
30
32
29

REF. NO	NOTE	PART NO.	D E S C R I P T I O N	ヒ ン メ イ	Qty
1		140-00152	ARM AND BED ASM.	ｱｰﾑ.ﾍﾞｯﾄ (ｸﾐ)	1
2		140-00103	ARM	ｱｰﾑ	(1)
3		140-00707	ARM BET CONNECTING PIN	ｱｰﾑ ﾍﾞｯﾄｹﾂｺﾞｳﾋﾟﾝ	(2)
4		SM-6084502-TP	SCREW	ﾛｯｶｸｱﾅﾎﾞﾙﾄ M8 L=45	(2)
5		SM-6085002-TP	SCREW	ﾛｯｶｸｱﾅﾎﾞﾙﾄ	(2)
6		140-00202	BED	ﾍﾞｯﾄ	(1)
7		PH-0400202-C0	PIN	ﾍｲｺｳﾋﾟﾝ ﾏﾙ4X20	(7)
8		140-00301	LOOPER DRIVING SHAFT BASE	ﾙｰﾊﾟｰｸﾄﾞｳｼﾞｸﾀﾞｲ	(1)
9		SM-6061602-TP	SCREW M6 L=16	ﾛｯｶｸｱﾅﾎﾞﾙﾄ	(3)
10		SM-6081802-TP	SCREW	ﾛｯｶｸｱﾅﾎﾞﾙﾄ	(4)
11		140-00608	SUPPORT BASE, RIGHT	ﾍﾞｯﾄﾌﾟﾚｰﾄｻｻｴﾀﾞｲ (ﾐｷﾞ)	(1)
12		140-00509	SUPPORT BASE, LEFT	ﾍﾞｯﾄﾌﾟﾚｰﾄｻｻｴﾀﾞｲ (ﾋﾀﾞﾘ)	(1)
13		140-00400	LOOPER DRIVING BASE	ﾙｰﾊﾟｰｸﾄﾞｳﾀﾞｲ	(1)
14		SM-6062002-TP	SCREW M6 L=20	ﾛｯｶｸｱﾅﾎﾞﾙﾄ M6 L=20	(4)
15		140-01705	PACKING	ﾏﾄﾞｲﾀCﾊﾟｯｷﾝ	1
16		SM-0040801-SF	SCREW M4X0.7 L=8	ﾄﾗｽｺﾈｼﾞ M4X0.7 L=8	10
17		140-01606	WINDOW PLATE, C	ﾏﾄﾞｲﾀ C	1
18		140-01408	WINDOW PLATE, A	ﾏﾄﾞｲﾀ A	1
19		140-01507	WINDOW PLATE, B	ﾏﾄﾞｲﾀ B	1
20		140-01200	FACE PLATE	ﾒﾝｲﾀ	1
21		140-01002	PLATE SUPPORT BLOCK	ﾌﾟﾚｰﾄｻｻｴｺﾏ	2
22		140-00806	BED PLATE	ﾍﾞｯﾄﾌﾟﾚｰﾄ	1
23		140-01309	SEAL	ﾒﾝｲﾀｹｼｮｳﾊﾞﾝｼｰﾙ	1
24		140-01804	WINDOW PLATE, D	ﾏﾄﾞｲﾀ D	1
25		SL-4040691-SC	SCREW M4 L=6	ｻﾞｶﾞﾈｼﾞｷ ﾅﾍﾞｺﾈｼﾞ M4 L=6	2
26		140-04105	FINGER GUARD	ﾕﾋﾞｶﾞｰﾄﾞ	1
27		140-04006	GEAR COVER	ｾﾝｶｲｷﾞﾔｶﾊﾞｰ	1
28		SM-6041002-TP	SCREW M4 L=10	ﾛｯｶｸｱﾅﾎﾞﾙﾄ M4X0.7 L=10	2
29		G5314-161-000	CONVEYOR SUPPORT	ｺﾝﾍﾞｱｻｻｴ	1
30		WP-1021016-SD	WASHER	ﾋﾗｻﾞｶﾞﾈ 10.2X18X1	2
31		140-01101	MAIN CAM GUIDE SHAFT	ﾒｲﾝｶﾑｶﾞｲﾄﾞｼﾞｸ	1
32		SM-6101602-TP	HEXAGONAL-HOLE BOLT M10 L=16	ﾛｯｶｸｱﾅﾎﾞﾙﾄ M10 L=16	2
33		SM-8511650-TP	SCREW	ﾄﾒﾈｼﾞ M8X0.75 L=16	2
34		NM-6510515-SC	NUT	ﾛｯｶｸﾅｯﾄ M8X0.75 H=5 3ｼｭ	2
35		WZ-0420350-KP	DISC SPRING	ｻﾗﾊﾞﾈ	4
36		140-04204	SCREW	ｵｻｴﾈｼﾞ	4
37		140-04303	COLLAR	ｵｻｴｶﾗｰ	4
38		RE-0120000-K0	E-RING	Eｶﾞﾀﾄﾒﾜ 1.2	4
39		140-04501	SPRING COVER	ｶﾞｽｽﾌﾟﾘﾝｸﾞ ｶﾊﾞｰ	1
40		140-04709	SPRING SHAFT B	ｶﾞｽｽﾌﾟﾘﾝｸﾞｼﾞｸ (B)	1
41		140-04600	SPRING SHAFT A	ｶﾞｽｽﾌﾟﾘﾝｸﾞｼﾞｸ (A)	1
42		RE-0700000-K0	E-RING 7	Eｶﾞﾀﾄﾒﾜ 7	3
43		NM-6080001-SC	NUT M8X1.25	ﾛｯｶｸﾅｯﾄ M8 1ｼｭ	1
44		WS-0820002-KR	SPRING WASHER, M8	ﾊﾞﾈｻﾞｶﾞﾈ 8.2X15.4X2	1
45		WP-0841601-SE	WASHER	ﾋﾗｻﾞｶﾞﾈ	1
46		SL-4061691-SL	SCREW	ｻﾞｶﾞﾈｼﾞｷ ﾅﾍﾞｺﾈｼﾞ	2
47		NM-6060001-SC	NUT M6	ﾛｯｶｸﾅｯﾄ M6 1ｼｭ	4
48		140-04402	SPRING	ｶﾞｽｽﾌﾟﾘﾝｸﾞ	1

針棒関係（1）

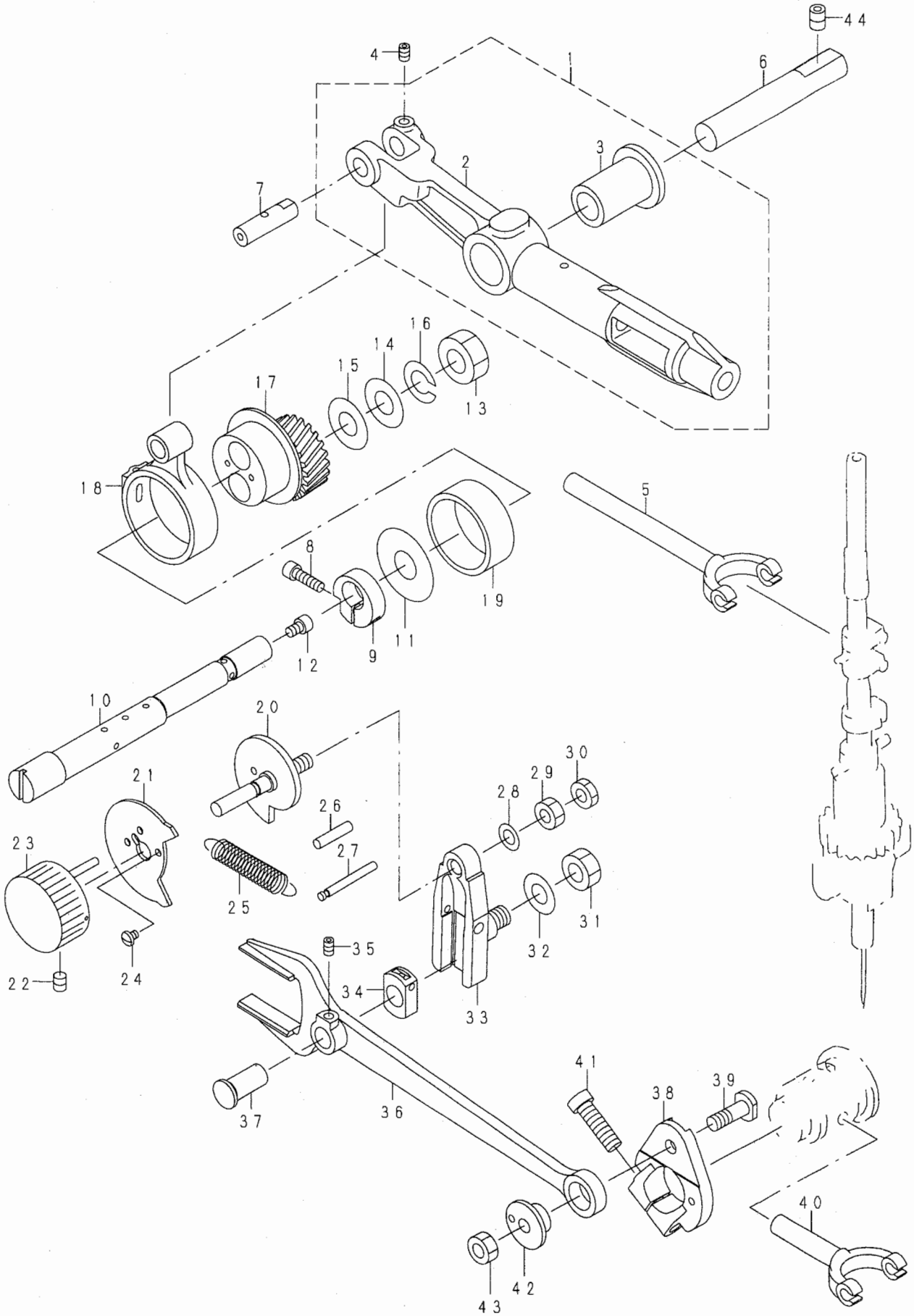

44
4
1
6
3
2
7
16
14
15
17
13
18
5
8
19
11
9
12
10
20
30
29
28
21
26
23
27
25
31
32
35
22
24
34
33
41
39
38
37
36
40
42
43

REF. NO	NOTE	PART NO.	DESCRIPTION	ヒ ン メ イ	Qty
1		140-05854	NEEDLE BAR ARM ASM.	ﾊﾘﾎﾞ ｳｼﾞ ﾖｳｹﾞ ｳﾃﾞ (ｸﾐ)	1
2		140-05805	NEEDLE BAR ARM	ﾊﾘﾎﾞ ｳｼﾞ ﾖｳｹﾞ ｳﾃﾞ	(1)
3		140-05904	NEEDLE BAR ARM METAL	ﾊﾘﾎﾞ ｳｼﾞ ﾖｳｹﾞ ｳﾃﾞ ﾒﾀﾙ	(1)
4		SM-8040602-TP	SCREW M4X0.7 L=6	ﾄﾒﾈｼﾞ	1
5		140-05706	NEEDLE BAR FORK	ﾊﾘﾎﾞ ｳｼﾞ ﾖｳｹﾞ ﾌﾀﾏﾀ	1
6		140-06001	NEEDLE BAR SHAFT	ﾊﾘﾎﾞ ｳｼﾞ ﾖｳｹﾞ ｼﾞｸ	1
7		140-06100	ROCK LINK SHAFT	ｼﾞ ﾖｳｹﾞ ﾖｳﾄ ｳﾘﾝｸｼﾞｸ	1
8		SM-6041402-TP	SCREW M4 L=14	ﾛｯｶｸｱﾅﾎﾞﾙﾄ M4	1
9		140-06506	COLLAR	ﾊﾘﾎﾞ ｳｸﾄ ｳｼﾞ ｸｶﾗｰ	1
10		140-06407	NEEDLE BAR DRIVING SHAFT	ﾊﾘﾎﾞ ｳｸﾄ ｳｼﾞｸ	1
11		138-87005	THRUST WASHER	ｽﾗｽﾄﾜｯｼｬ	1
12		SM-6040602-TP	SCREW M4 L=6	ﾛｯｶｸｱﾅﾎﾞﾙﾄ M4X0.7 L=6	1
13		NM-6550825-SF	NUT	ﾒｰﾄﾙﾅｯﾄ	1
14		WP-1002036-SC	WASHER 10.0X21.0X2.0	ﾋﾗｻﾞ ｶﾞﾈ 10X21X2	1
15		140-06902	SPACER	ﾊﾘﾎﾞ ｳｸﾄ ｳｼﾞ ｸｽﾍﾟｰｻｰ A	1
16		WS-1020002-KN	SPRING WASHER M10	ﾊﾞﾈｻﾞ ｶﾞﾈ M10	1
17		140-06654	NEEDLE BAR DRIVING CAM ASM.	ﾊﾘﾎﾞ ｳｸﾄ ｳｶﾑ (ｸﾐ)	1
18		140-06308	ROCK LINK	ｼﾞ ﾖｳｹﾞ ﾖｳﾄ ｳﾘﾝｸ	1
19	#01	D1636-415-D0B	NEEDLE ROCKER	ｽｲﾍｲｵｸﾘ ﾍﾞｱﾘﾝｸﾞ B	1
20		140-08056	ADJUST CAM ASM.	ﾊﾘﾌﾘﾁﾖｳｾﾂｶﾑ (ｸﾐ)	1
21		140-08205	ADJUST STOPPER	ﾊﾁﾌﾘﾁﾖｳｾﾂｽﾄｯﾊﾟｰ	1
22		SM-8050612-TP	SCREW M5X6	ﾄﾒﾈｼﾞ M5X0.8 L=6	1
23		140-08353	ADJUSTING KNOB	ﾊﾘﾌﾘﾁﾖｳｾﾂﾂﾏﾐ (ｸﾐ)	1
24		SM-4030455-SP	SCREW	ﾅﾍﾞｺﾈｼﾞ M3 L=4	1
25		140-08403	ADJUST CAM SPRING	ﾊﾘﾌﾘﾁﾖｳｾﾂｶﾑﾊﾞﾈ	1
26		PS-0400182-K0	SPRING PIN 4.0X18	ｽﾌﾟﾘﾝｸﾞﾋﾟﾝ 4.0X18	1
27		B3423-180-000	ANCHOR	ｷﾄﾞｰｳﾃﾞ ﾊﾞﾈｶｹ A	1
28		WZ-0620550-KP	WASHER	ｻﾗﾊﾞﾈｻﾞ ｶﾞﾈ 6.2X12.5X0.5	1
29		NM-6060002-SE	NUT M6	ﾛｯｶｸﾅｯﾄ M6 2ｼｭ	1
30		NM-6060003-SC	NUT M6	ﾛｯｶｸﾅｯﾄ M6	1
31		NM-6080002-SE	NUT M8	ﾛｯｶｸﾅｯﾄ M8	1
32		WP-0841601-SC	WASHER 8.4X17.4X1.6	ﾋﾗｻﾞ ｶﾞﾈ ﾐｶﾞｷﾏﾙ M8	1
33		140-07702	NEEDLE BAR ROCK CRANK	ﾊﾘﾎﾞ ｳﾖｳﾄ ｳｸﾗﾝｸ	1
34		140-07603	NEEDLE BAR ROCK BLOCK	ﾊﾘﾎﾞ ｳﾖｳﾄ ｳｶｸｺﾞﾏ	1
35		SM-8040602-TP	SCREW M4X0.7 L=6	ﾄﾒﾈｼﾞ	1
36		140-07504	ROCK CONNECTING ROD	ﾖｳﾄ ｳﾚﾝｹﾂﾛｯﾄﾞ	1
37		140-07801	CONNECTING ROD PIN	ﾚﾝｹﾂﾛｯﾄﾞﾋﾟﾝ	1
38		140-07207	OCK CONNECTING BASE	ﾖｳﾄ ｳﾚﾝｹﾂﾀﾞｲ	1
39		140-07306	OCK CONNECTING SHAFT	ﾖｳﾄ ｳﾚﾝｹﾂｼﾞｸ	1
40		140-07108	FORK	ﾊﾘﾎﾞ ｳﾖｳﾄ ｳﾌﾀﾏﾀ	1
41		SM-6062502-TP	SCREW M6 L=25	ﾛｯｶｸｱﾅﾎﾞﾙﾄ M6 L=25	1
42		140-07405	ADJUST CAM	ｾﾂﾀﾞﾝﾊﾊﾞﾁﾖｳｾﾂｶﾑ	1
43		NM-6060001-CP	NUT M6	ﾛｯｶｸﾅｯﾄ M6	1
44		SM-8060802-TP	SCREW M6 L=8	ﾄﾒﾈｼﾞ M6 L=8	1

NOTE（注記）　#01....SELECTING PART FOR FIT TOLERANCE　選択かん合部品

針棒関係（２）

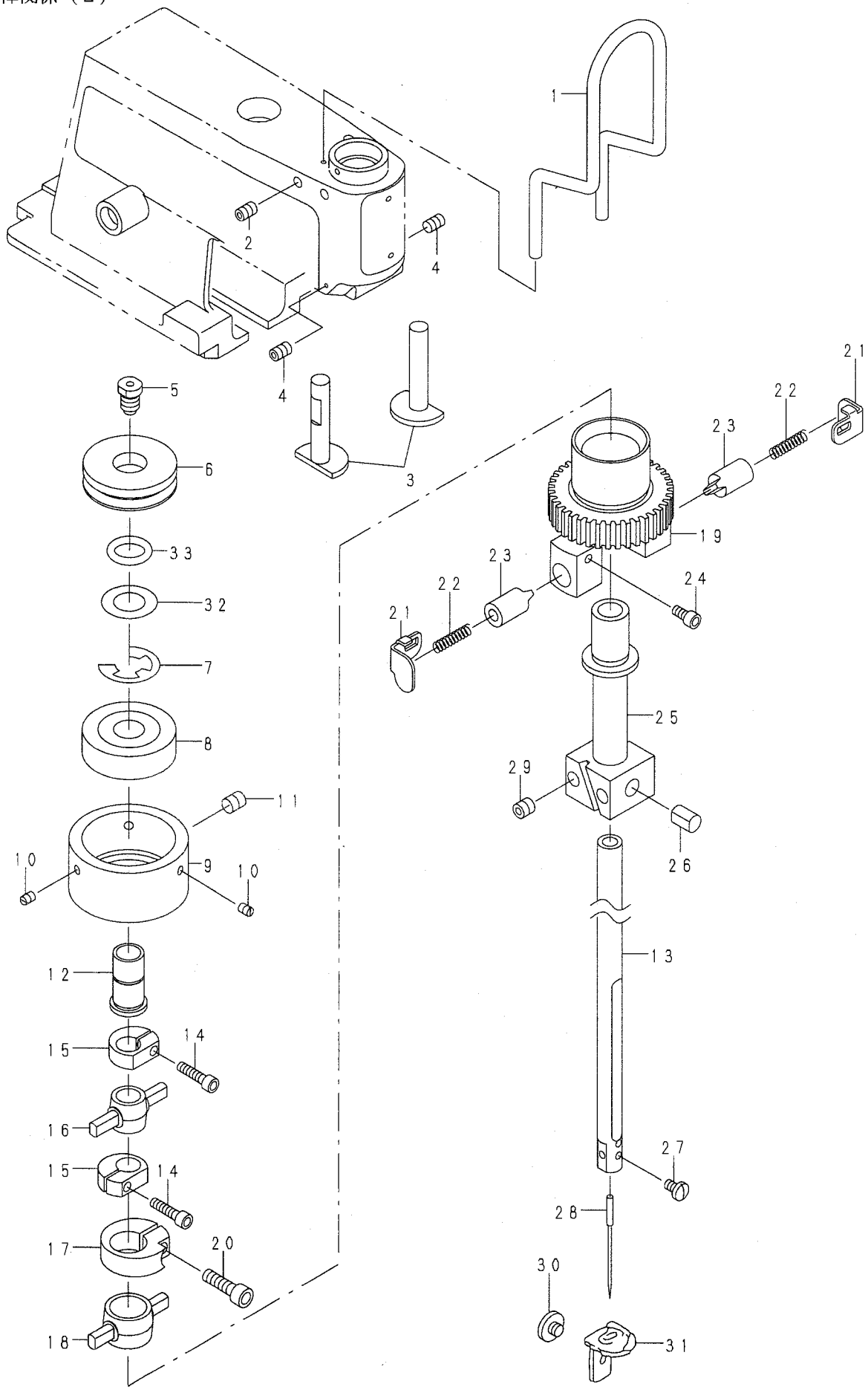
1
2
4
4
3
5
6
33
32
7
8
11
10
9
10
12
15
14
16
15
14
17
20
18
21
22
23
19
23
22
21
24
25
29
26
13
27
28
30
31

REF.NO	NOTE	PART NO.	D E S C R I P T I O N	ヒ ン メ イ	Qty
1		140-09401	NEEDLE BAR COVER	ﾊﾘﾎﾞｳｶﾊﾞｰ	1
2		SM-8040602-TP	SCREW M4X0.7 L=6	ﾄﾒﾈｼﾞ	1
3		140-08809	SUPPORT ROTARY GEAR	ﾊﾘﾎﾞｳｾﾝｶｲｷﾞｱｻﾎﾟｴ	2
4		SM-8040602-TP	SCREW M4X0.7 L=6	ﾄﾒﾈｼﾞ	2
5		140-05201	NEEDLE BAR THREAD GUIDE	ﾊﾘﾎﾞｳｲﾄｱﾝﾅｲ	1
6		140-05300	NEEDLE BAR BEARING PRESSER	ﾊﾘﾎﾞｳﾍﾞｱﾘﾝｸﾞｵｻｴ	1
7		RE-0900000-K0	E-RING 9	Eｶﾞﾀﾄﾒﾜ 9	1
8		SB-1100016-00	SHAFT HOLDER	ｺﾛｶﾞﾘｼﾞｸｳｹ	1
9		140-05409	NEEDLE BAR GUIDE METAL	ﾊﾘﾎﾞｳｶﾞｲﾄﾞﾒﾀﾙ	1
10		SM-8030440-SF	SCREW M3 L=4	ｽﾘﾜﾘﾂｷ ﾄﾒﾈｼﾞ	3
11		SM-8050612-TP	SCREW M5X6	ﾄﾒﾈｼﾞ M5X0.8 L=6	1
12		140-06209	NEEDLE BAR UPPER METAL	ﾊﾙﾎﾞｳｳｴﾒﾀﾙ	1
13		140-05052	NEEDLE BAR	ﾊﾘﾎﾞｳ	1
14		SM-6031202-TP	SCREW M3X0.5 L=12	ﾛｯｶｸｱﾅﾎﾞﾙﾄ	2
15		140-05607	COLLAR	ﾊﾘﾎﾞｳｼﾞﾖｳｹﾞﾘﾝｸｶﾗｰ	2
16		140-05508	LINK	ﾊﾘﾎﾞｳｼﾞﾖｳｹﾞﾘﾝｸ	1
17		140-06506	NEEDLE BAR ROCK LINK COLLAR	ﾊﾘﾎﾞｳｸｸﾄﾞｳｼﾞｸｶﾗｰ	1
I8		140-07009	NEEDLE BAR ROCK LINK	ﾊﾘﾎﾞｳｳﾖｳﾄﾞｳﾘﾝｸ	1
19		140-08650	REVOLUTION GEAR ASM.	ﾊﾘﾎﾞｳｾﾝｶｲｷﾞｱ(ｸﾐ)	1
20		SM-6041402-TP	SCREW M4 L=14	ﾛｯｶｸｱﾅﾎﾞﾙﾄ M4	1
21		140-09302	ROCK GUIDE LID	ﾖｳﾄﾞｳｶﾞｲﾄﾞｶﾏ	2
22		140-09203	NEEDLE BAR ROCK GUIDE SPRING	ﾊﾘﾎﾞｳｳﾖｳﾄﾞｳｶﾞｲﾄﾞﾊﾞﾈ	2
23		140-09104	NEEDLE BAR ROCK GUIDE	ﾊﾘﾎﾞｳｳﾖｳﾄﾞｳｶﾞｲﾄﾞ	2
24		SM-6030602-TP	SCREW M3X0.5 L=6	ﾛｯｶｸｱﾅﾎﾞﾙﾄ M3X0.5 L=6	2
25		140-08908	NEEDLE BAR ROCK BASE	ﾊﾘﾎﾞｳｳﾖｳﾄﾞｳﾀﾞｲ	1
26		140-09005	NEEDLE BAR THRUST PIN	ﾊﾘﾎﾞｳｽﾗｽﾄﾋﾟﾝ	2
27		SM-7430510-TM	SCREW	ﾏﾙﾋﾗﾈｼﾞ M3X0.35 L=5	1
28		MC-1858010-00	NEEDLE	ﾊﾘ ｼｭﾒｯﾂ 558 NM100	1
29		SM-8050502-TP	SCREW M5 L=5	ﾄﾒﾈｼﾞ	2
30		140-09807	SCREW	ﾊﾘｲﾀﾄﾒﾈｼﾞ	1
31		140-09500	THROAT PLATE	ﾊﾘｲﾀ (A)	1
32		WP-1020616-SD	WASHER	ﾋﾗｻﾞｶﾞﾈ	1
33		RO-0982401-00	RUBBER RING	Oﾘﾝｸﾞ	1

クランプ関係（1）

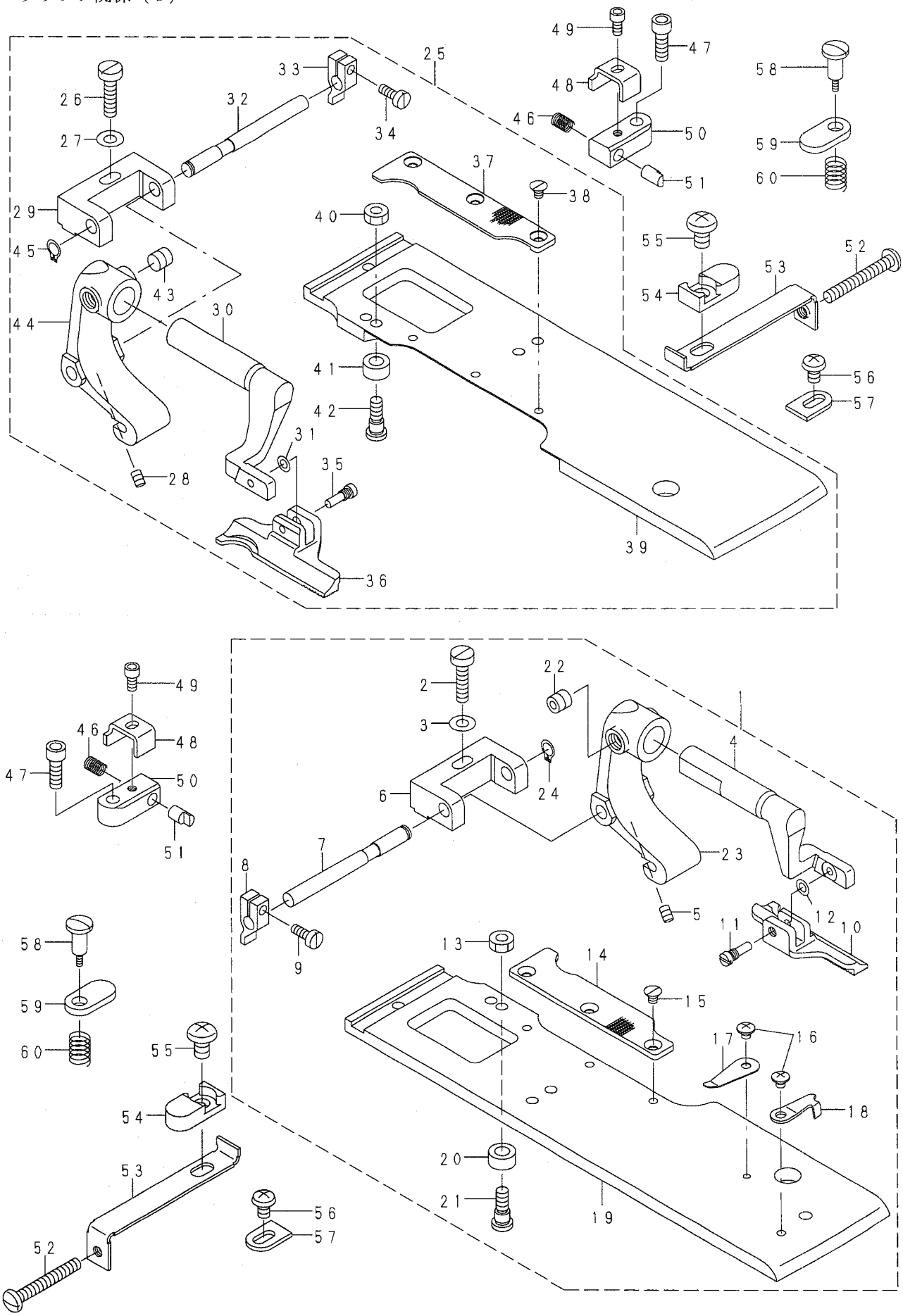

49
47
25
33
48
58
26
32
46
50
34
27
59
37
51
60
38
29
40
55
45
52
53
43
54
44
30
41
56
42
57
31
35
28
39
36
49
2
22
46
48
3
4
47
50
24
6
51
7
23
8
5
12
11
10
58
13
14
9
59
15
60
17
16
55
18
54
20
53
21
19
56
57
52

REF. NO	NOTE	PART NO.	DESCRIPTION	ヒ ン メ イ	Qty
1		140-10151	EYELET PRESSER FOOT ASM. LEFT	ﾊﾄﾒｵｻｴｱｼ ﾋﾀﾞﾘ 40MM (ｸﾐ)	1
2		SM-6041610-SC	SCREW M4X0.7 L=16	ﾋﾗｺﾈｼﾞ	(1)
3		WP-0430801-SE	WASHER 4.3X9X0.8	ﾋﾗｻﾞｶﾞﾈ ﾐｶﾞｷﾏﾙ M4	(1)
4		140-10300	PRESSER ARM, LEFT	ｵｻｴｳﾃﾞ (ﾋﾀﾞﾘ)	(1)
5		SM-8040602-TP	SCREW M4X0.7 L=6	ﾄﾒﾈｼﾞ	(1)
6		140-11001	PRESSER ARM INSTALLING BASE	ｵｻｴｳﾃﾞﾄﾘﾂｹﾀﾞｲ	(1)
7		140-10805	PRESSER ARM SHAFT	ｵｻｴｱｼｼﾃﾝｼﾞｸ	(1)
8		140-10904	CLOTH OPEN GUIDE	ﾇﾉﾋﾗｷﾎｼﾞﾂﾒ	(1)
9		SM-6030860-SP	SCREW	ﾋﾗﾈｼﾞ M3 L=8	(1)
10		140-10102	EYELET PRESSER FOOT ASM. LEFT	ﾊﾄﾒｵｻｴｱｼ(ﾋﾀﾞﾘ) 40MM	(1)
11		140-10508	SCREW	ｵｻｴｱｼ ﾄﾘﾂｹﾈｼﾞ	(1)
12		WZ-0320290-UZ	DISC SPRING WASHER	ﾏｹﾞｻﾞｶﾞﾈ	(1)
13		NM-6040001-SN	NUT M4X0.7	6ｶｸﾅｯﾄ M4	(1)
14		140-11506	PRESSER SUPPORT PLAT PLATE, L	ﾊﾄﾒｵｻｴｳｹｲﾀ (ﾋﾀﾞﾘ)	(1)
15		SM-1030400-SP	SCREW	ｻﾗﾈｼﾞ M3 L=4	(3)
16		SM-0030301-SN	SCREW	ﾄﾗｽﾈｼﾞ M3 L=3	(2)
17		140-11803	CLAMP	ｼﾀｲﾄｸﾗﾝﾌﾟ	(1)
18		140-11902	KNIFE	ｲﾄｷﾘﾒｽ	(1)
19		140-11308	WORK CLAMP PLATE, LEFT	ｵｻｴｲﾀ (ﾋﾀﾞﾘ)	(1)
20		140-11605	CLAMP SLIDE ROLLER	ｸﾗﾝﾌﾟｽﾗｲﾄﾞｺﾛ	(1)
21		SD-0500456-TP	SCREW	ﾀﾞﾝﾈｼﾞ D=5 H=4.5	(1)
22		SM-8060602-TP	SCREW M6X6	ﾄﾒﾈｼﾞ M6 L=6	(1)
23		140-11100	PRESSER ARM BASE, LEFT	ｵｻｴｳﾃﾞﾍﾞｰｽ (ﾋﾀﾞﾘ)	(1)
24		RC-0470611-KP	RETAINING RING 4.7	Cｶﾞﾀﾄﾒﾜ 4.7	(1)
25		140-10052	EYELET PRESSER FOOT ASM. R	ﾊﾄﾒｵｻｴｱｼ ﾐｷﾞ 40MM (ｸﾐ)	1
26		SM-6041610-SC	SCREW M4X0.7 L=16	ﾋﾗｺﾈｼﾞ	(1)
27		WP-0430801-SE	WASHER 4.3X9X0.8	ﾋﾗｻﾞｶﾞﾈ ﾐｶﾞｷﾏﾙ M4	(1)
28		SM-8040602-TP	SCREW M4X0.7 L=6	ﾄﾒﾈｼﾞ	(1)
29		140-11001	INSTALLING BASE	ｵｻｴｳﾃﾞﾄﾘﾂｹﾀﾞｲ	(1)
30		140-10201	PRESSER ARM, RIGHT	ｵｻｴｳﾃﾞ (ﾐｷﾞ)	(1)
31		WZ-0320290-UZ	DISC SPRING WASHER	ﾏｹﾞｻﾞｶﾞﾈ	(1)
32		140-10805	PRESSER ARM SHAFT	ｵｻｴｱｼｼﾃﾝｼﾞｸ	(1)
33		140-10904	CLOTH OPEN GUIDE	ﾇﾉﾋﾗｷﾎｼﾞﾂﾒ	(1)
34		SM-6030860-SP	SCREW	ﾋﾗﾈｼﾞ M3 L=8	(1)
35		140-10508	SCREW	ｵｻｴｱｼ ﾄﾘﾂｹﾈｼﾞ	(1)
36		140-10003	EYELET PRESSER FOOT ASM. R	ﾊﾄﾒｵｻｴｱｼ(ﾐｷﾞ) 40MM	(1)
37		140-11407	PRESSER SUPPORT PLAT, RIGHT	ﾊﾄﾒｵｻｴｳｹｲﾀ (ﾐｷﾞ)	(1)
38		SM-1030400-SP	SCREW	ｻﾗﾈｼﾞ M3 L=4	(3)
39		140-11209	WORK CLAMP PLAT, RIGHT	ｵｻｴｲﾀ (ﾐｷﾞ)	(1)
40		NM-6040001-SN	NUT M4X0.7	6ｶｸﾅｯﾄ M4	(1)
41		140-11605	CLAMP SLIDE ROLLER	ｸﾗﾝﾌﾟｽﾗｲﾄﾞｺﾛ	(1)
42		SD-0500456-TP	SCREW	ﾀﾞﾝﾈｼﾞ D=5 H=4.5	(1)
43		SM-8060602-TP	SCREW M6X6	ﾄﾒﾈｼﾞ M6 L=6	(1)
44		140-10409	PRESSER ARM BASE, RIGHT	ｵｻｴｳﾃﾞﾍﾞｰｽ (ﾐｷﾞ)	(1)
45		RC-0470611-KP	RETAINING RING 4.7	Cｶﾞﾀﾄﾒﾜ 4.7	(1)
46		140-12207	CLOTH OPEN GUIDE PIN SPRING	ﾇﾉﾋﾗｷﾎｼﾞﾋﾟﾝﾊﾞﾈ	2
47		SM-6041202-TP	SCREW M4X0.7 L=12	ﾛｯｶｸｱﾅﾎﾞﾙﾄ	2
48		140-12306	STOPPER	ﾇﾉﾋﾗｷﾎｼﾞﾋﾟﾝｽﾄｯﾊﾟｰ	2
49		SM-6030602-TP	SCREW M3X0.5 L=6	ﾛｯｶｸｱﾅﾎﾞﾙﾄ M3X0.5 L=6	2
50		140-12009	CLOTH OPEN GUIDE BASE	ﾇﾉﾋﾗｷﾎｼﾞﾄﾞﾀﾞｲ	2
51		140-12108	CLOTH OPEN GUIDE PIN	ﾇﾉﾋﾗｷﾎｼﾞﾋﾟﾝ	2
52		SM-4043050-SC	SCREW M4X0.7 L=30	ﾅﾍﾞｺﾈｼﾞ M4X0.7 L=30	2
53		140-12900	SLIDE ADJUST PLATE	ｽﾗｲﾄﾞﾁｮｳｾｲｲﾀ	2
54		140-13007	STOPPING PLATE	ｽﾗｲﾄﾞﾁｮｳｾﾂﾄﾒｲﾀ	2
55		SM-4050801-SC	SCREW M5X0.8 L=8	ﾅﾍﾞｺﾈｼﾞ M5X0.8 L=8	2
56		SM-5040601-SC	SCREW M4X0.7 L=6	ﾊﾞｲﾝﾄﾞｺﾈｼﾞ M4X0.7 L=6	2
57		140-12801	SLIDE STOPPER	ｽﾗｲﾄﾞｽﾄｯﾊﾟｰ	2
58		SD-0501006-TP	SCREW	ﾀﾞﾝﾈｼﾞ D=5 H=10	2
59		140-12504	CLAMP SUPPORT PLATE	ｸﾗﾝﾌﾟﾎｼﾞｲﾀ	2
60		140-12702	CLAMP SUPPORT SPRING	ｸﾗﾝﾌﾟﾎｼﾞﾊﾞﾈ	2

クランプ関係（２）

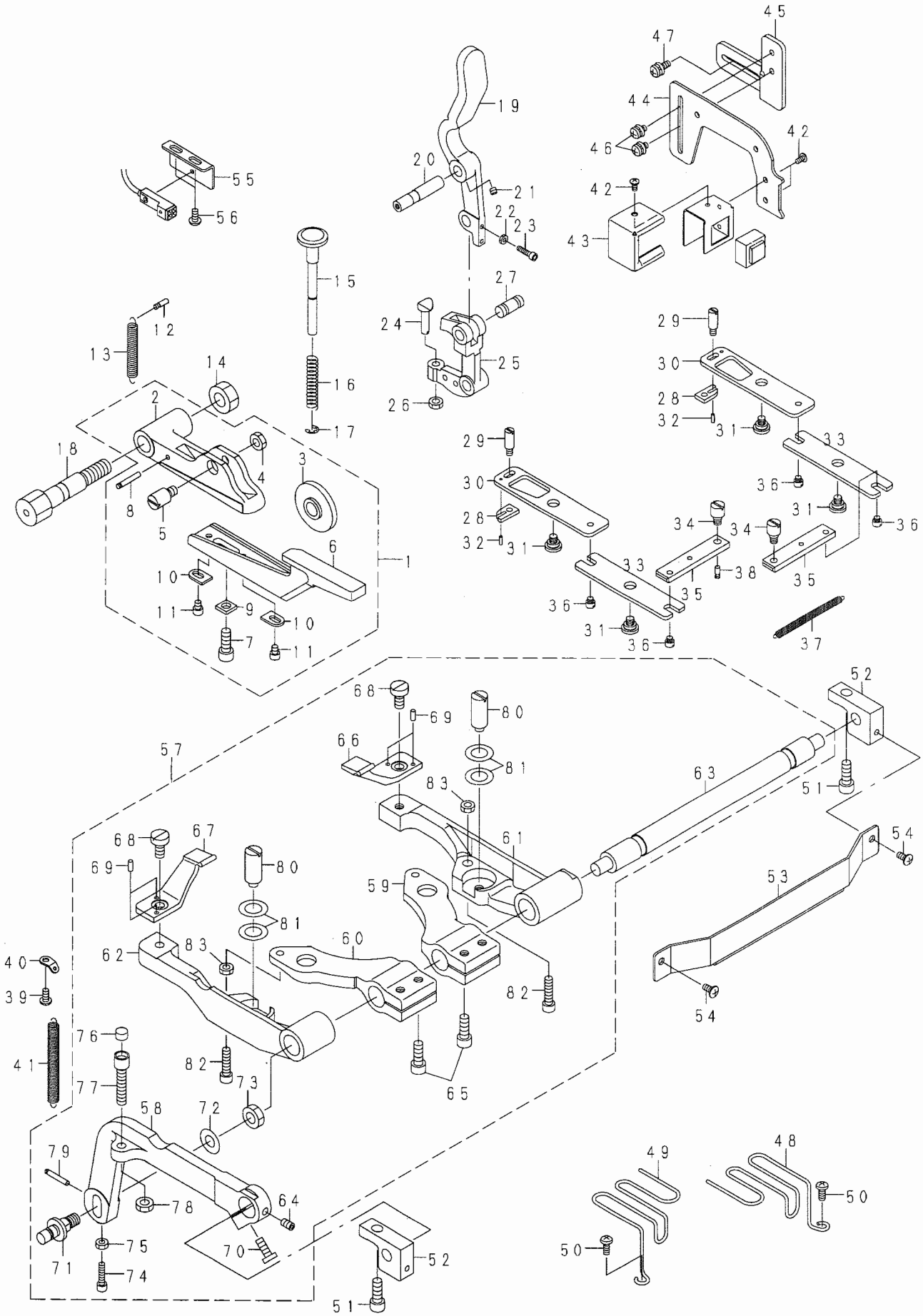
1
2
3
4
5
6
7
8
9
10
11
12
13
14
15
16
17
18
19
20
21
22
23
24
25
26
27
28
29
30
31
32
33
34
35
36
37
38
39
40
41
42
43
44
45
46
47
48
49
50
51
52
53
54
55
56
57
58
59
60
61
62
63
64
65
66
67
68
69
70
71
72
73
74
75
76
77
78
79
80
81
82
83

REF. NO	NOTE	PART NO.	DESCRIPTION	ヒ ン メ イ	Qty
1		140-17552	CLAMP STARTING ARM ASM.	ｸﾗﾝﾌﾟ ｷﾄﾞｳﾃﾞ (ｸﾐ)	1
2		140-17909	CLAMP STARTING BASE	ｸﾗﾝﾌﾟ ｷﾄﾞｳﾀﾞｲ	(1)
3		140-18006	ROLLER	ｸﾗﾝﾌﾟ ｷﾄﾞｳｺﾛ	(1)
4		NM-6060003-SC	NUT M6	ﾛｯｶｸﾅｯﾄ M6	(1)
5		140-18105	ROLLER SHAFT	ｸﾗﾝﾌﾟ ｷﾄﾞｳｺﾛｼﾞｸ	(1)
6		140-17503	CLAMP STARTING ARM	ｸﾗﾝﾌﾟ ｷﾄﾞｳﾃﾞ	(1)
7		SM-6061602-TP	SCREW M6 L=16	ﾛｯｶｸｱﾅﾎﾞﾙﾄ	(1)
8		B3434-180-000	ANCHOR	ｽﾍﾟﾘｼﾞｸ ｳﾃﾞ ﾊﾞﾈｶｹ	(1)
9		140-17602	WASHER	ｸﾗﾝﾌﾟ ｷﾄﾞｳﾃﾞ ﾄﾒﾈｼﾞ ｻﾞｶﾞﾈ	(1)
10		140-17701	CA-CB STOPPER	CA-CBｽﾄｯﾊﾟｰ	(2)
11		SM-6040502-TP	SCREW M4X0.7 L=5	ﾛｯｶｸｱﾅﾎﾞﾙﾄ M4 L=5	(2)
12		B2347-180-000	SPRING RACK	ﾊﾞﾈｶｹ	1
13		140-18303	CLAMP STARTING SPRING	ｸﾗﾝﾌﾟ ｷﾄﾞｳﾊﾞﾈ	1
14		NM-6100001-SC	NUT M10X1.5	ﾛｯｶｸﾅｯﾄ M10 1ｼｭ	1
15		140-18550	LEVER	ｵｻｴﾚﾊﾞｰ (ｸﾐ)	1
16		140-18709	SPRING	ｵｻｴﾎﾞﾘﾚﾊﾞｰﾊﾞﾈ	1
17		RE-0400000-K0	E-RING 4	Eｶﾞﾀﾄﾒﾜ 4	1
18		140-18204	SCREW	ｸﾗﾝﾌﾟ ｷﾄﾞｳﾀﾞｲﾄﾒﾈｼﾞ	1
19		140-17008	PRESSER LIFTING LEVER	ｵｻｴｱｹﾞﾚﾊﾞｰ	1
20		140-17107	HAND LIFTR FULCRUM SHAFT	ｵｻｴｱｹﾞﾚﾊﾞｰｼﾃﾝｼﾞｸ	1
21		SM-8040402-TP	SCREW M4X0.7 L=4	ﾄﾒﾈｼﾞ M4X0.7 L=4	1
22		NM-6030003-SC	NUT M3	ﾛｯｶｸﾅｯﾄ M3	2
23		SM-6031202-TP	SCREW M3X0.5 L=12	ﾛｯｶｸｱﾅﾎﾞﾙﾄ	2
24		140-17305	CLAMP STARTING ARM SCREW	ｷﾄﾞｳﾃﾞ ﾁｮｳｾﾂﾈｼﾞ	1
25		140-17206	HAND LIFTER FORK	ｵｻｴｱｹﾞ ﾌﾀﾏﾀ	1
26		NM-6050003-SC	NUT M5X0.8	ﾛｯｶｸﾅｯﾄ M5X0.8 3ｼｭ	1
27		140-17404	SUPPORT SHAFT	ｵｻｴｱｹﾞ ﾌﾀﾏﾀｼﾃﾝｼﾞｸ	1
28		140-15101	PLATE	ｽﾗｲﾄﾞｾｲｷﾞｮﾋﾟﾝﾄﾒｲﾀ	2
29		140-14104	PIN	ｽﾗｲﾄﾞｾｲｷﾞｮﾋﾟﾝ B	2
30		140-14807	SLIDE CONTROL LINK	ｽﾗｲﾄﾞｾｲｷﾞｮﾘﾝｸ	2
31		SD-0800276-TP	SCREW	ﾀﾞﾝﾈｼﾞ D=8 H=2.7	4
32		PS-0200062-KH	SPRING PIN 2X6	ｽﾌﾟﾘﾝｸﾞﾋﾟﾝ 2X6	2
33		140-14609	SLIDE CONTROL LINK FORK	ｾｲｷﾞｮﾘﾝｸﾌﾀﾏﾀ	2
34		140-14005	PIN A	ｽﾗｲﾄﾞｾｲｷﾞｮﾋﾟﾝ A	2
35		140-14203	SLIDE CONTROL BASE	ｽﾗｲﾄﾞｾｲｷﾞｮﾀﾞｲ	2
36		140-14302	PIN	ｾｲｷﾞｮﾀﾞｲﾋﾟﾝ	4
37		140-14401	SPRING	ｽﾗｲﾄﾞｾｲｷﾞｮﾀﾞｲﾊﾞﾈ	1
38		140-14500	SPRING HOOK	ｽﾗｲﾄﾞｾｲｷﾞｮﾀﾞｲﾊﾞﾈｶｹ	2
39		SL-4040891-SC	SCREW M4 L=8	ｻﾞｶﾞﾈｼﾞｷ ﾅﾍﾞｺﾈｼﾞ M4 L=8	1
40		140-16901	SPRING HOOK	ｸﾄﾞｳﾃﾞﾓﾄﾞｼﾊﾞﾈｶｹ	1
41		140-16703	CLAMP MOVING SPRING	ｸﾗﾝﾌﾟ ｻﾄﾞｳﾊﾞﾈ	1
42		SM-0030601-SC	SCREW M3X0.5 L=6	ﾄﾗｽｺﾈｼﾞ M3X0.5 L=6	3
43		140-19905	START SWITCH COVER	ｽﾀｰﾄｽｲｯﾁｶﾊﾞｰ	1
44		140-15200	START SWITCH BASE A	ｽﾀｰﾄｽｲｯﾁﾍﾞｰｽ A	1
45		140-15309	START SWITCH BASE B	ｽﾀｰﾄｽｲｯﾁﾍﾞｰｽ B	1
46		SL-4040891-SC	SCREW M4 L=8	ｻﾞｶﾞﾈｼﾞｷ ﾅﾍﾞｺﾈｼﾞ M4 L=8	2
47		SL-4041291-SC	SCREW M4 L=12	ﾅﾍﾞｺﾈｼﾞ ｾﾑｽ M4 L=12	2
48		140-13106	FINGER GUARD (RIGHT)	ﾕﾋﾞｶﾞｰﾄﾞ (ﾐｷﾞ)	1
49		140-13205	FINGER GUARD (LEFT)	ﾕﾋﾞｶﾞｰﾄﾞ (ﾋﾀﾞﾘ)	1
50		SL-4041091-SC	SCREW M4 X 10	ﾅﾍﾞｺﾈｼﾞ ｾﾑｽ M4X0.7 L=10	2
51		SM-6061602-TP	SCREW M6 L=16	ﾛｯｶｸｱﾅﾎﾞﾙﾄ	2
52		140-16604	CLAMP DRIVING ARM SUPPORT	ｸﾗﾝﾌﾟ ｻﾄﾞｳﾃﾞ ｻﾎﾟｴ	2
53		140-16802	CLAMP FRONT COVER	ｸﾗﾝﾌﾟ ﾏｴｶﾊﾞｰ	1
54		SM-0040801-SC	SCREW	ﾄﾗｽﾈｼﾞ M4 L=8	2
55		140-19707	FITTING PLATE	ﾇﾉｾｯﾄｾﾝｻ ﾄﾘﾂｹｲﾀ	1
56		SL-4040881-SC	SCREW M4 L=8	ｻﾞｶﾞﾈｼﾞｷ ﾅﾍﾞｺﾈｼﾞ M4 L=8	2
57		140-15556	CLAMP MOVING ARM ASM.	ｸﾗﾝﾌﾟ ｻﾄﾞｳﾃﾞ (ｸﾐ)	1
58		140-15507	CLAMP MOVING BASE	ｸﾗﾝﾌﾟ ｻﾄﾞｳﾍﾞｰｽ	(1)
59		140-15606	CLAMP DRIVING ARM (RIGHT)	ｸﾗﾝﾌﾟ ｸﾄﾞｳﾃﾞ (ﾐｷﾞ)	(1)
60		140-15705	CLAMP DRIVING ARM (LEFT)	ｸﾗﾝﾌﾟ ｸﾄﾞｳﾃﾞ (ﾋﾀﾞﾘ)	(1)
61		140-15804	CLAMP MOVING ARM (RIGHT)	ｸﾗﾝﾌﾟ ｻﾄﾞｳﾃﾞ (ﾐｷﾞ)	(1)
62		140-15903	CLAMP MOVING ARM (LEFT)	ｸﾗﾝﾌﾟ ｻﾄﾞｳﾃﾞ (ﾋﾀﾞﾘ)	(1)
63		140-16000	CLAMP MOVING SHAFT	ｸﾗﾝﾌﾟ ｻﾄﾞｳｼﾞｸ	(1)
64		SM-8050842-TP	SETSCREW	ﾄﾒﾈｼﾞ	(1)
65		SM-6061602-TP	SCREW M6 L=16	ﾛｯｶｸｱﾅﾎﾞﾙﾄ	(4)
66		140-16109	CLAMP MOVING LINK (RIGHT)	ｸﾗﾝﾌﾟ ｻﾄﾞｳﾘﾝｽ (ﾐｷﾞ)	(1)
67		140-16208	CLAMP MOVING LINK (LEFT)	ｸﾗﾝﾌﾟ ｻﾄﾞｳﾘﾝｽ (ﾋﾀﾞﾘ)	(1)
68		SM-6061200-SP	SCREW	ﾋﾗﾈｼﾞ M6 L=12	(2)
69		PH-0300074-S0	PIN	ﾍｲｺｰﾋﾟﾝ 3X7	(4)
70		SM-6061602-TP	SCREW M6 L=16	ﾛｯｶｸｱﾅﾎﾞﾙﾄ	(1)
71		140-16307	PIN	ｵｻｴｱｯﾁｮｳｾﾂﾋﾟﾝ	(1)
72		WP-0850002-SC	WASHER 8.5X18X1.6	ﾋﾗｻﾞｶﾞﾈ 8.5XI8X1.6	(1)
73		NM-6080003-SC	NUT M8	ﾛｯｶｸﾅｯﾄ M8 3ｼｭ	(1)
74		SM-6041602-TP	SCREW M4X0.7 L=16	ﾛｯｶｸｱﾅﾎﾞﾙﾄ M4X0.7 L=16	(1)
75		NM-6040001-SN	NUT M4X0.7	6ｶｸﾅｯﾄ M4	(1)
76		B1516-180-000	BUSH	ﾚﾊﾞｰｽﾄｯﾊﾟｰﾌﾞｯｼｭ	(1)
77		140-16406	SCREW	ｵｻｴｱｹﾞﾁｮｳｾﾂﾈｼﾞ	(1)
78		NM-6060003-SC	NUT M6	ﾛｯｶｸﾅｯﾄ M6	(1)
79		B3434-180-000	ANCHOR	ｽﾍﾟﾘｼﾞｸ ｳﾃﾞ ﾊﾞﾈｶｹ	(1)
80		140-16505	SPRING SHAFT	ｸﾗﾝﾌﾟ ｻﾗﾊﾞﾈｼﾞｸ	(2)
81		WZ-1120850-KP	WASHER	ｻﾗﾊﾞﾈｻﾞｶﾞﾈ11.2X22.5X0.8	(24)
82		SM-6052002-TP	SCREW M5 L=20	ﾛｯｶｸｱﾅﾎﾞﾙﾄ M5X0.8 L=20	(2)
83		NM-6050003-SC	NUT M5X0.8	ﾛｯｶｸﾅｯﾄ M5X0.8 3ｼｭ	(2)

主軸関係

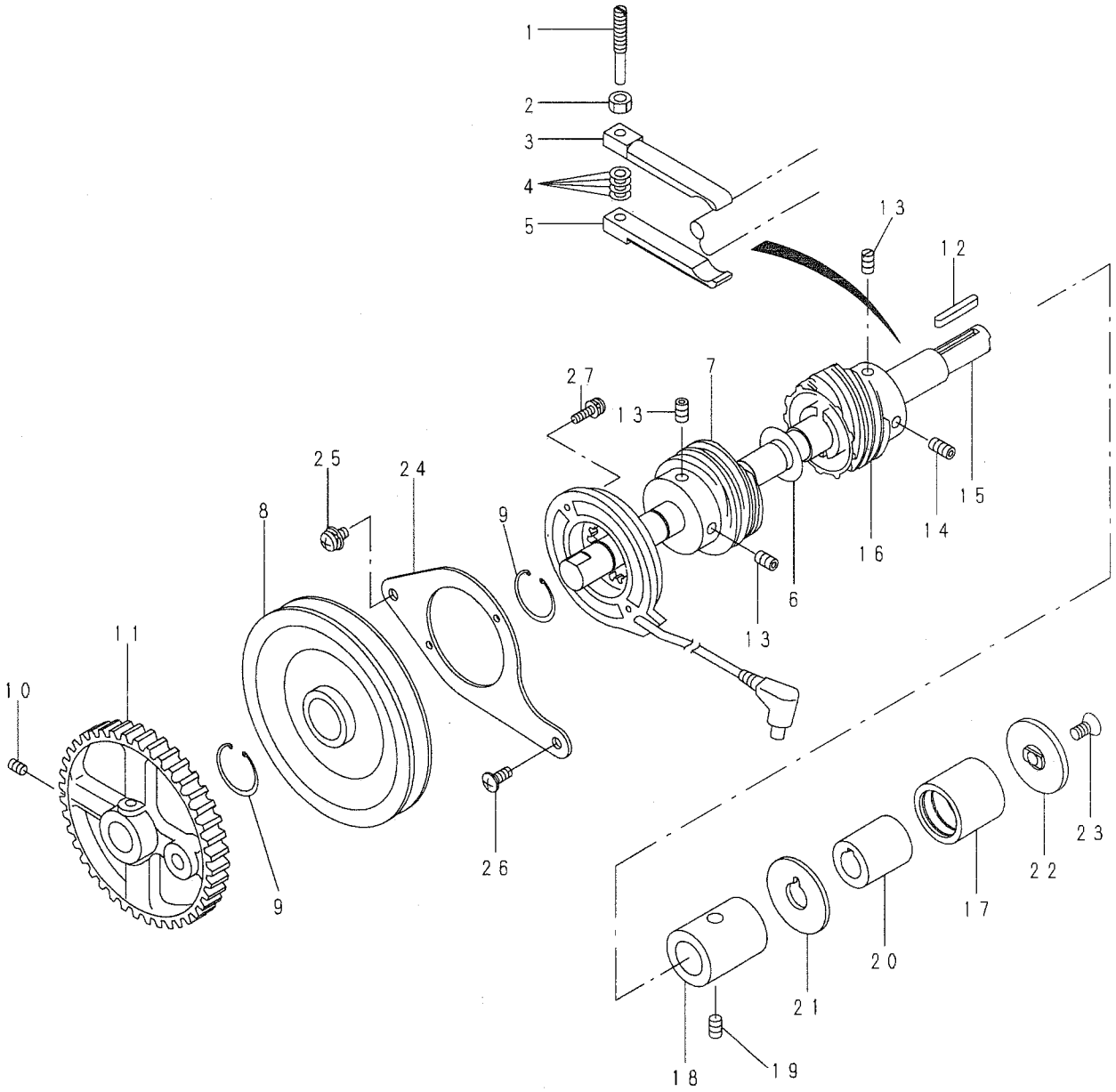
1
2
3
4
5
13
12
27
13
7
25
24
8
9
15
14
16
6
13
11
10
9
26
23
22
17
20
21
18
19

REF. NO	NOTE	PART NO.	D E S C R I P T I O N	ヒ ン メ イ	Qty
1		140-21505	SCREW	ｼｭｼﾞｸﾌﾞﾚｰｷ ﾁｮｳｾﾂﾈｼﾞ	1
2		NM-6060001-SC	NUT M6	ﾛｯｶｸﾅｯﾄ M6 1ｼｭ	1
3		140-21307	MAIN SHAFT BRAKE A	ｼｭｼﾞｸﾌﾞﾚｰｷ A	1
4		WZ-0520550-KP	SPRING 5.2X10X0.5	ｻﾗﾊﾞﾈ 5.2X10X0.5	14
5		140-21406	MAIN SHAFT BRAKE B	ｼｭｼﾞｸﾌﾞﾚｰｷ B	1
6		G5523-880-000	THRUST WASHER B	ｽﾗｽﾄｻﾞｶﾞﾈB	1
7		140-20309	PATTERN FEED WORM	ﾊﾟﾀｰﾝｵｸﾘｳｫｰﾑ	1
8		140-20150	FEED PULLEY	ﾊﾔｵｸﾘﾌﾟｰﾘ (ｸﾐ)	1
9		RC-1600001-KP	SNAP RING 16.0	Cｶﾞﾀﾄﾒﾜ	2
10		SM-8050812-TP	SCREW M5X8	ﾄﾒﾈｼﾞ M5X0.8 L=8	2
11		140-20200	FEED GEAR	ｵｸﾘｷﾞﾔ	1
12		140-21604	ONE WAY CLUTCH KEY	ｸﾗｯﾁｷｰ	1
13		SM-8061002-TP	SCREW M6 L=10	ﾄﾒﾈｼﾞ M6 L=10	3
14		SM-8061242-TP	SCREW	ﾄﾒﾈｼﾞ M6 L=12	1
15		140-20002	MAIN SHAFT	ｼｭｼﾞｸ	1
16		140-20507	FEED CAM WORM	ｼｭｶﾑｳｫｰﾑ	1
17		SB-3250003-00	BEARING	ｺﾛｶﾞﾘｼﾞｸｳｹ	1
18		140-20606	METAL	ｼｭｼﾞｸﾒﾀﾙ	1
19		SM-8061002-TP	SCREW M6 L=10	ﾄﾒﾈｼﾞ M6 L=10	1
20		140-20705	CLUTCH BASE	ｸﾗｯﾁﾄﾞﾀﾞｲ	1
21		140-21109	SPACER	ﾜﾝｳｪｲｸﾗｯﾁｽﾍﾟｰｻｰ	1
22		140-21208	ONE WAY CLUTCH LID	ﾜﾝｳｪｲｸﾗｯﾁﾌﾀ	1
23		SM-1061201-SN	SCREW M6 L=12	ｻﾗｺﾈｼﾞ M6 L=12	1
24		140-21703	INSTALLING PLATE	ﾊﾔｵｸﾘｽﾃｰﾀ ﾄﾘﾂｹｲﾀ	1
25		SL-4051091-SC	SCREW M5X0.8 L=10	ﾅﾍﾞｺﾈｼﾞ ｾﾑｽ M5X0.8 L=10	1
26		SM-0051201-SC	SCREW	ﾄﾗｽﾈｼﾞ M5 L=12	1
27		SL-4041691-SC	SCREW M4 X 10	ﾅﾍﾞｺﾈｼﾞ ｾﾑｽ M4X0.7 L=16	2

上軸関係

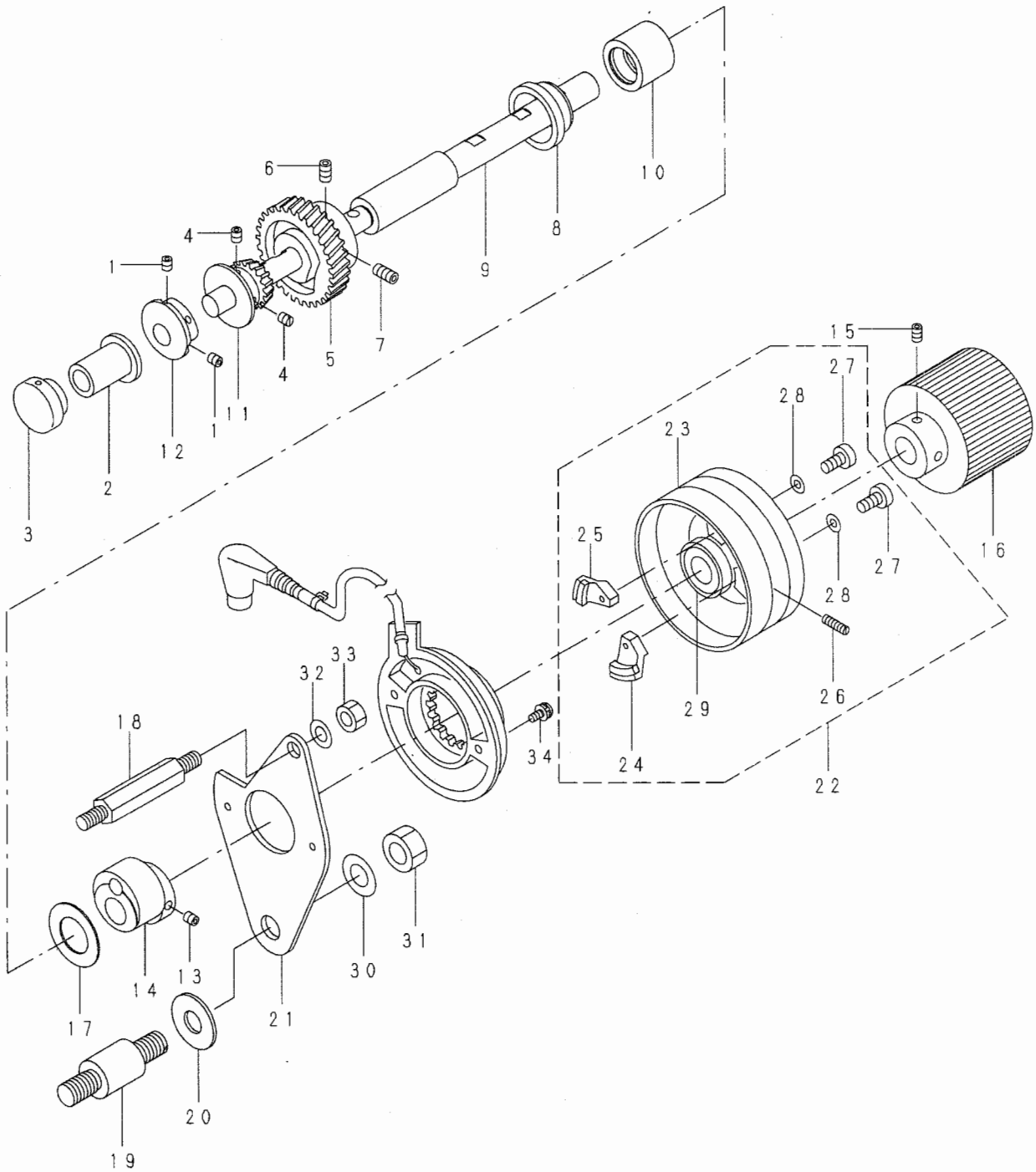
1
2
3
4
4
5
6
7
8
9
10
11
12
15
16
17
18
19
20
21
22
23
24
25
26
27
27
28
28
29
30
31
32
33
34

REF. NO	NOTE	PART NO.	D E S C R I P T I O N	ヒ ン メ イ	Qty
1		SM-8050612-TP	SCREW M5X6	トメネジ M5X0.8 L=6	2
2		140-05904	METAL	ハリホ ウシ ヨウケ ウテ メタル	1
3		100-32001	NYLON CAP	カサハク ルマ ハコフ キヤツフ	1
4		SM-8050612-TP	SCREW M5X6	トメネジ M5X0.8 L=6	2
5		140-22602	CAM	テンヒ ンカム	1
6		SM-8061002-TP	SCREW M6 L=10	トメネジ M6 L=10	1
7		SM-8061242-TP	SCREW	トメネジ M6 L=12	1
8		140-22404	UPPER SHAFT BUSHING, FRONT	ウワシ クマエメタル	1
9		140-22008	UPPER SHAFT	ウワシ ク	1
10		SB-3200005-00	BEARING	コロカ リシ クウケ	1
11		140-22701	GEAR	ウワシ クカサハク ルマ	1
12		140-22800	NEEDLE BAR ROCK CAM	ハリホ ウヨウト ウカム	1
13		SM-8050612-TP	SCREW M5X6	トメネジ M5X0.8 L=6	2
14		140-22305	CAM	オクリカム	1
15		SM-8050812-TP	SCREW M5X8	トメネジ M5X0.8 L=8	2
16		140-22107	HAND WHEEL	ハズ ミク ルマ	1
17		G6028-870-000	FOLDING BASE SHAFT STARTING CI	オリヘ ースシ ク キト ウリン	1
18		140-23105	SCREW	ステータトリツケイタトメネジ	1
19		140-23204	FEED FORK	オクリフタマタシ ク	1
20		140-23303	SPACER	オクリフタマタスヘ ーサー	1
21		140-23006	INSTALLING PLATE	ステータトリツケイタ	1
22		140-22255	PULLEY ASM.	ミシンフ -リ (クミ)	1
23		140-22206	PULLEY	ミシンフ -リ	(1)
24		M4007-110-0AA	MAGNET FITTING BASE A ASM.	マク ネツト トリツケタ イ A クミ	(1)
25		M4007-110-0AB	MAGNET FITTING BASE B ASM.	マク ネツト トリツケタ イ B クミ	(1)
26		SS-8151550-SP	SCREW 15/64-28 L=15	トメネジ 15/64-28 L=15	(2)
27		SS-6111210-SP	SCREW 11/64-40 L=12	ヒラネジ 11/64-40 L=12	(2)
28		WP-0450801-SD	WASHER 4.5X10X0.8	ヒラサ ガ ネ 4.5X10X0.8	(2)
29		M4002-110-000	GENERATOR ROTOR	ハツテ ンキロ ータ-	(1)
30		WP-1302501-SE	WASHER M12	ヒラサ ガ ネ	1
31		NM-6120003-SC	NUT M12	ロツカクナツト M12 3シユ	1
32		WP-1052000-SC	WASHER 10.5X18X2	ヒラサ ガ ネ 10.5X18X2	1
33		NM-6080001-SC	NUT M8X1.25	ロツカクナツト M8 1シユ	1
34		SL-4041091-SC	SCREW M4 X 10	ナヘ コネジ セムス M4X0.7 L=10	2

送り関係

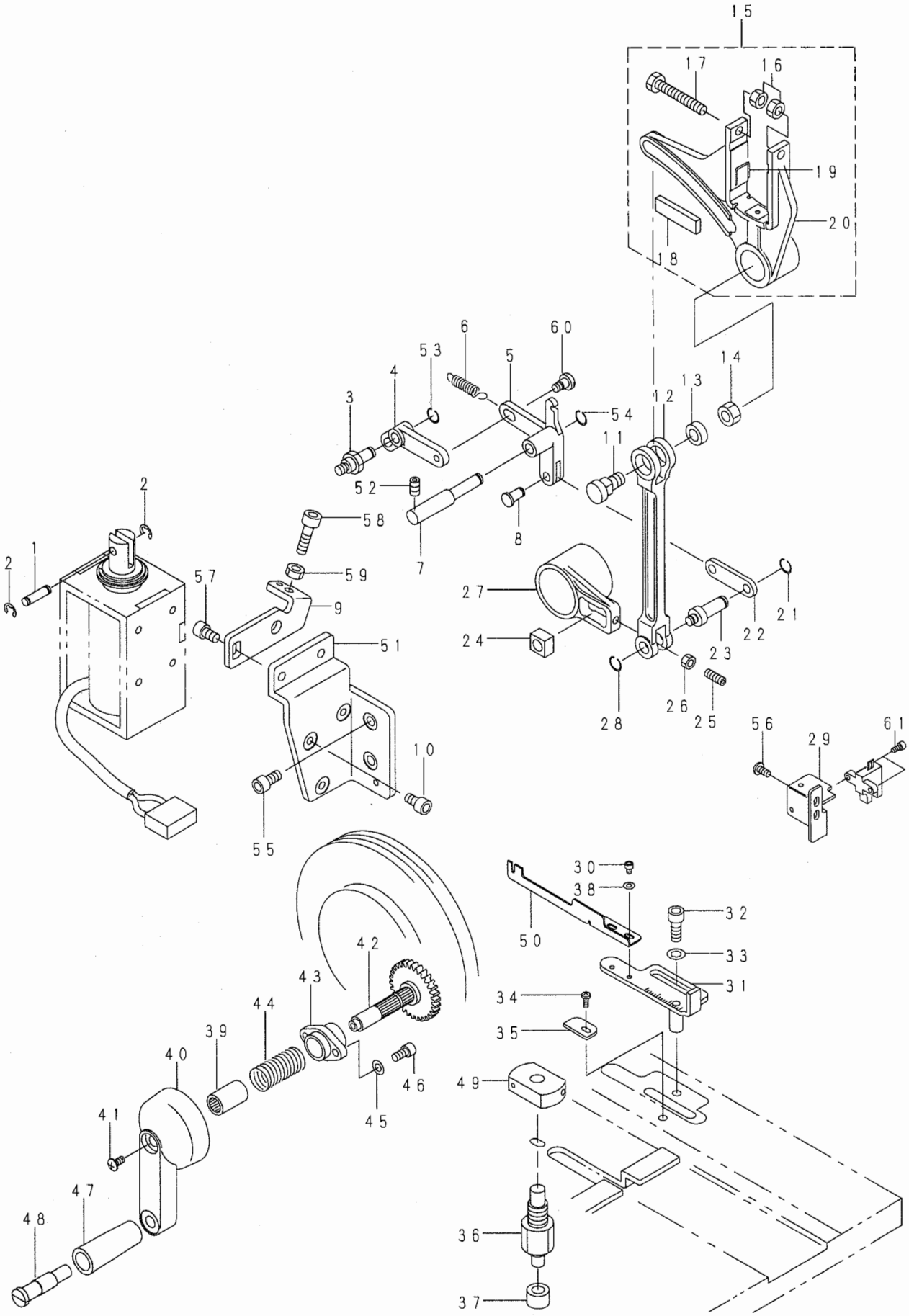
15
17
16
19
20
18
6
60
53
5
4
3
54
14
13
12
11
52
8
7
2
58
2
1
57
59
9
27
21
22
24
23
51
26
28
25
56
29
61
10
55
30
38
32
50
33
42
31
43
34
44
35
39
40
46
49
45
41
47
48
36
37

REF. NO	NOTE	PART NO.	D E S C R I P T I O N	ヒ ン メ イ	Qty
1		D2464-555-B00	LINK DRIVING MAGNET PIN	ﾏｸﾞﾈｯﾄ ﾘﾝｸﾋﾟﾝ	1
2		RE-0400000-K0	E-RING 4	Eｶﾞﾀﾄﾒﾜ 4	2
3		140-24608	LEVER LINK SHAFT	ﾍﾝｶﾝﾚﾊﾞｰﾘﾝｸｼﾞｸ	1
4		140-24707	PITCH CHANGING LEVER LINK	ﾋﾟｯﾁﾍﾝｶﾝﾚﾊﾞｰﾘﾝｸ	1
5		140-24806	PITCH CHANGING LEVER	ﾋﾟｯﾁﾍﾝｶﾝﾚﾊﾞｰ	1
6		B2021-771-000	TENSION SPRING	ｳﾜｲﾄｷﾘ ﾋｯﾊﾟﾘﾊﾞﾈ	1
7		140-24905	PITCH CHANGING LEVER SHAFT	ﾋﾟｯﾁﾍﾝｶﾝﾚﾊﾞｰｼﾞｸ	1
8		140-25100	PITCH CHANGING ROD SHAFT	ﾋﾟｯﾁﾍﾝｶﾝﾛｯﾄﾞｼﾞｸ	1
9		140-25209	LEVER HOLDING PLATE	ﾚﾊﾞｰｳｹｲﾀ	1
10		SS-6111052-TP	SCREW	ﾛｯｶｸｱﾅﾎﾞﾙﾄ	3
11		140-23907	FEED ADJUST SHAFT	ｵｸﾘﾁｮｳｾﾂｼﾞｸ	1
12		140-23808	FEED CONNECTING ROD	ｵｸﾘﾚﾝｹﾂﾛｯﾄﾞ	1
13		140-24004	FEED ADJUST COLLAR	ｵｸﾘﾁｮｳｾﾂｶﾗｰ	1
14		NM-6080003-SC	NUT M8	ﾛｯｶｸﾅｯﾄ M8 3ｼｭ	1
15		140-23550	FEED FORK ASM.	ｵｸﾘﾌﾀﾏﾀ (ｸﾐ)	1
16		NM-6060001-SC	NUT M6	ﾛｯｶｸﾅｯﾄ M6 1ｼｭ	(2)
17		SM-9064053-SE	BOLT	ﾛｯｶｸﾎﾞﾙﾄ	(1)
18		140-23600	FELT	ｵｸﾘﾌﾀﾏﾀｷｮｳｷｭｳﾌｪﾙﾄ	(1)
19		140-23709	PIN	ｵｸﾘﾌﾀﾏﾀｷｮｳｷｭｳﾌｪﾙﾄﾋﾟﾝ	(2)
20		140-23501	FEED FORK	ｵｸﾘﾌﾀﾏﾀ	(1)
21		RC-0560711-KP	RETAINING RING	Cｶﾞﾀﾄﾒﾜ	2
22		140-25001	PITCH CHANGING ROD	ﾋﾟｯﾁﾍﾝｶﾝﾛｯﾄﾞ	1
23		140-24301	PIN	ｵｸﾘｳﾃﾞｶｸｺﾏﾋﾟﾝ	1
24		140-24202	FEED ARM BLOCK	ｵｸﾘｳﾃﾞｶｸｺﾞﾏ	1
25		SM-8051402-TP	SCREW M5 L=14	ﾄﾒﾈｼﾞ M5 L=14	1
26		NM-6050003-SC	NUT M5X0.8	ﾛｯｶｸﾅｯﾄ M5X0.8 3ｼｭ	1
27		140-24103	FEED ARM	ｵｸﾘｳﾃﾞ	1
28		RC-0740811-KP	C-RING	Cｶﾞﾀﾄﾒﾜ 8	1
29		140-26207	SENSOR INSTALLING BASE	ﾇｲﾅｶﾞｻｾﾝｻｰﾄﾘﾂｹﾀﾞｲ	1
30		SM-6030402-TP	SCREW M3X0.5 L=4	ﾛｯｶｸｱﾅﾎﾞﾙﾄ	2
31		140-25852	ADJUSTING LEVER ASM.	ﾇｲﾅｶﾞｻﾁｮｳｾﾂﾚﾊﾞｰ (ｸﾐ)	1
32		SM-6061602-TP	SCREW M6 L=16	ﾛｯｶｸｱﾅﾎﾞﾙﾄ	1
33		WP-0641600-SC	WASHEW 6.4X12.5X1.6	ﾋﾗｻﾞｶﾞﾈ	1
34		SM-5030801-SC	SCREW M3X0.5 L=8	ﾊﾞｲﾝﾄﾞｺﾈｼﾞ M3X0.5 L=8	1
35		140-26009	STITCH LENGTH INDICATING PLATE	ﾇｲﾅｶﾞｻｼｼﾞｲﾀ	1
36		140-25506	BED PLATE FEED SHAFT	ﾍﾞｯﾄﾌﾟﾚｰﾄｵｸﾘｼﾞｸ	1
37		140-25704	BED PLATE FEED ROLLER	ﾍﾞｯﾄﾞﾌﾟﾚｰﾄｵｸﾘｺﾛ	1
38		WP-0320501-SD	WASHER	ﾋﾗｻﾞｶﾞﾈ ﾐｶﾞｷﾏﾙ M3	2
39		SB-3100009-00	BEARING	ｺﾛｶﾞﾘｼﾞｸｳｹ	1
40		140-26504	FEED HANDLE	ｵｸﾘﾊﾝﾄﾞﾙ	1
41		SM-0040801-SC	SCREW	ﾄﾗｽﾈｼﾞ M4 L=8	1
42		140-26751	FEED HANDLE GEAR ASM.	ｵｸﾘﾊﾝﾄﾞﾙｷﾞﾔ (ｸﾐ)	1
43		140-26900	METAL	ｵｸﾘﾊﾝﾄﾞﾙﾒﾀﾙ	1
44		140-26603	SPRING	ｵｸﾘﾊﾝﾄﾞﾙﾓﾄﾞｼﾊﾞﾈ	1
45		WP-0531001-SC	WASHER	ﾋﾗｻﾞｶﾞﾈ ﾐｶﾞｷﾏﾙ M5	2
46		SM-6051002-TP	SCREW M5X0.8 L=10	ﾛｯｶｸｱﾅﾎﾞﾙﾄ M5X0.8 L=10	2
47		140-26405	FEED HANDLE GRIP	ｵｸﾘﾊﾝﾄﾞﾙｸﾞﾘｯﾌﾟ	1
48		140-26306	FEED HANDLE SHAFT	ｵｸﾘﾊﾝﾄﾞﾙｼｬﾌﾄ	1
49		140-25605	BED FEED SHAFT BLOCK	ﾍﾞｯﾄﾞﾌﾟﾚｰﾄｵｸﾘｼﾞｸｶｸｺﾞﾏ	1
50		140-26108	SENSOR PLATE	ﾇｲﾅｶﾞｻｶﾝﾁｲﾀ	1
51		140-24509	SOLNOID INSTALLING PLATE	ﾋﾟｯﾁﾍﾝｶﾝｿﾚﾉｲﾄﾞ ﾄﾘﾂｹﾀﾞｲ	1
52		SM-8061002-TP	SCREW M6 L=10	ﾄﾒﾈｼﾞ M6 L=10	1
53		RC-0650811-KP	RETAINING RING	Cｶﾞﾀﾄﾒﾜ	1
54		RC-0650811-KP	RETAINING RING	Cｶﾞﾀﾄﾒﾜ	1
55		SM-6061202-TP	SCREW M6 L=12	ﾛｯｶｸｱﾅﾎﾞﾙﾄ M6 L=12	2
56		SL-4040891-SC	SCREW M4 L=8	ｻﾞｶﾞﾈﾂｷ ﾅﾍﾞｺﾈｼﾞ M4 L=8	2
57		SM-6061002-TP	SCREW M6 L=10	ﾛｯｶｸｱﾅﾎﾞﾙﾄ M6 L=10	1
58		SM-6063002-TP	SCREW M6 L=30	ﾊﾝｿｳﾀｲ ｼﾞｸｳｹ ﾄﾒﾈｼﾞ	1
59		NM-6060001-SC	NUT M6	ﾛｯｶｸﾅｯﾄ M6 1ｼｭ	1
60		SD-0640471-SP	HINGE SCREW D= 6.35 H= 4.7	ﾀﾞﾝﾈｼﾞ D=6.35 H=4.7	1
61		SM-6030602-TP	SCREW M3X0.5 L=6	ﾛｯｶｸｱﾅﾎﾞﾙﾄ M3X0.5 L=6	2

ルーパー駆動関係（１）

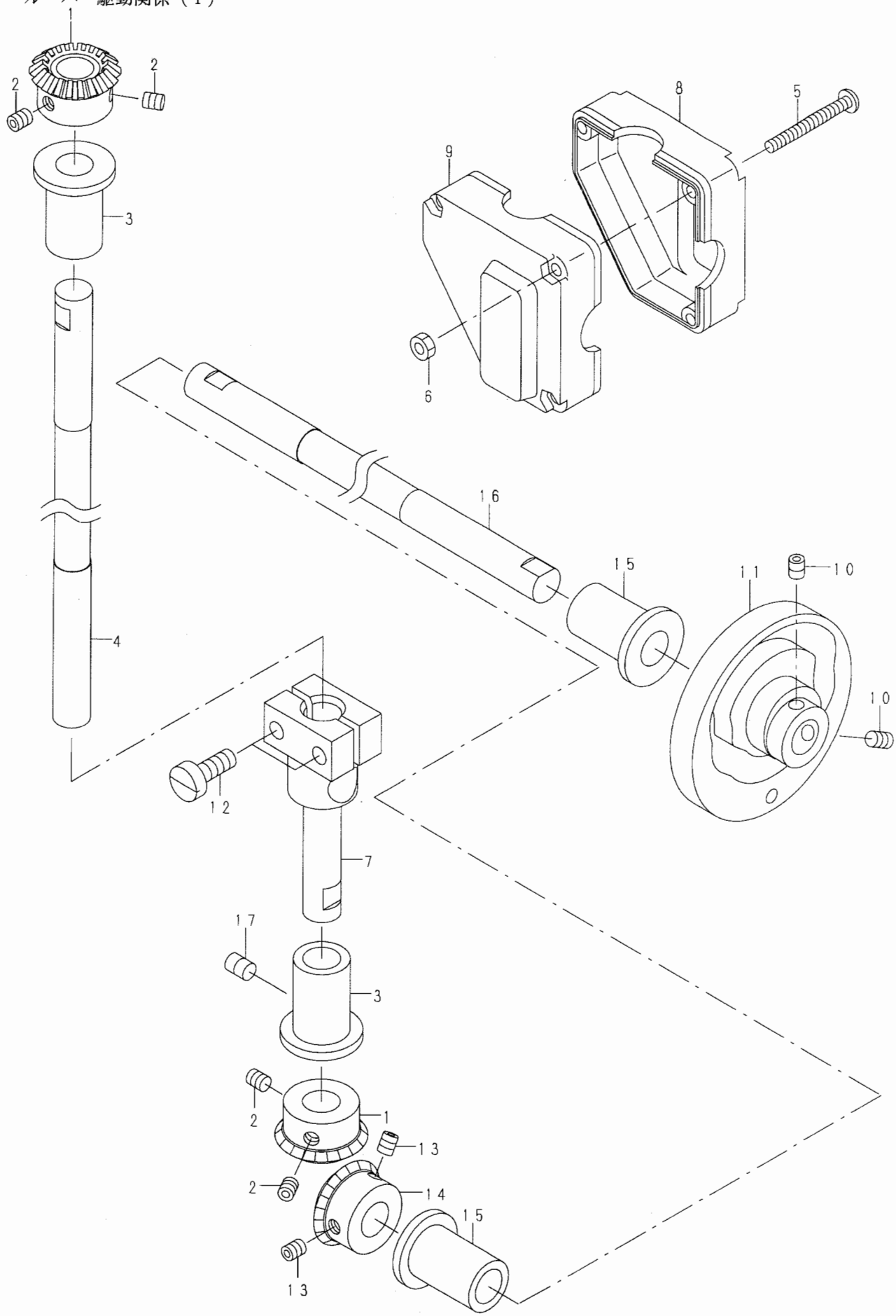

REF. NO	NOTE	PART NO.	D E S C R I P T I O N	ヒ ン メ イ	Qty
1		140-27106	GEAR	ﾀﾃｼﾞｸｶｻﾊｸﾞﾙﾏ	2
2		SM-8050612-TP	SCREW M5X6	ﾄﾒﾈｼﾞ M5X0.8 L=6	4
3		140-05904	METAL	ﾊﾘﾎﾞｳｼﾞﾖｳｹﾞｳﾃﾞﾒﾀﾙ	2
4		140-27007	SHAFT	ﾀﾃｼﾞｸ	1
5		SM-4043501-SE	SCREW M4 L=35	ﾅﾍﾞｺﾈｼﾞ M4X0.7 L=35	3
6		NM-6040002-SE	NUT M4X0.7	ﾛｯｶｸﾅｯﾄ M4X0.7 2ｼｭ	3
7		140-27205	SHAFT HOLDER	ﾀﾃｼﾞｸﾀﾞｷ	1
8		140-27601	GEAR BOX, A	ｷﾞﾔﾎﾞｯｸｽ A	1
9		140-27700	GEAR BOX, B	ｷﾞﾔﾎﾞｯｸｽ B	1
10		SM-8050612-TP	SCREW M5X6	ﾄﾒﾈｼﾞ M5X0.8 L=6	2
11		140-27502	LOOPER DRIVING CAM	ﾙｰﾊﾟｰｸﾄﾞｳｶﾑ	1
12		SM-6061650-TP	SCREW	ﾋﾗﾈｼﾞ M6 L=16	2
13		SM-8050612-TP	SCREW M5X6	ﾄﾒﾈｼﾞ M5X0.8 L=6	2
14		140-27403	GEAR	ﾙｰﾊﾟｰｼﾞｸｶｻﾊｸﾞﾙﾏ	1
15		140-05904	METAL	ﾊﾘﾎﾞｳｼﾞﾖｳｹﾞｳﾃﾞﾒﾀﾙ	2
16		140-27304	LOOPER CAM SHAFT	ﾙｰﾊﾟｰｶﾑｼﾞｸ	1
17		SM-8060802-TP	SCREW M6 L=8	ﾄﾒﾈｼﾞ M6 L=8	1

ルーパー駆動関係（２）

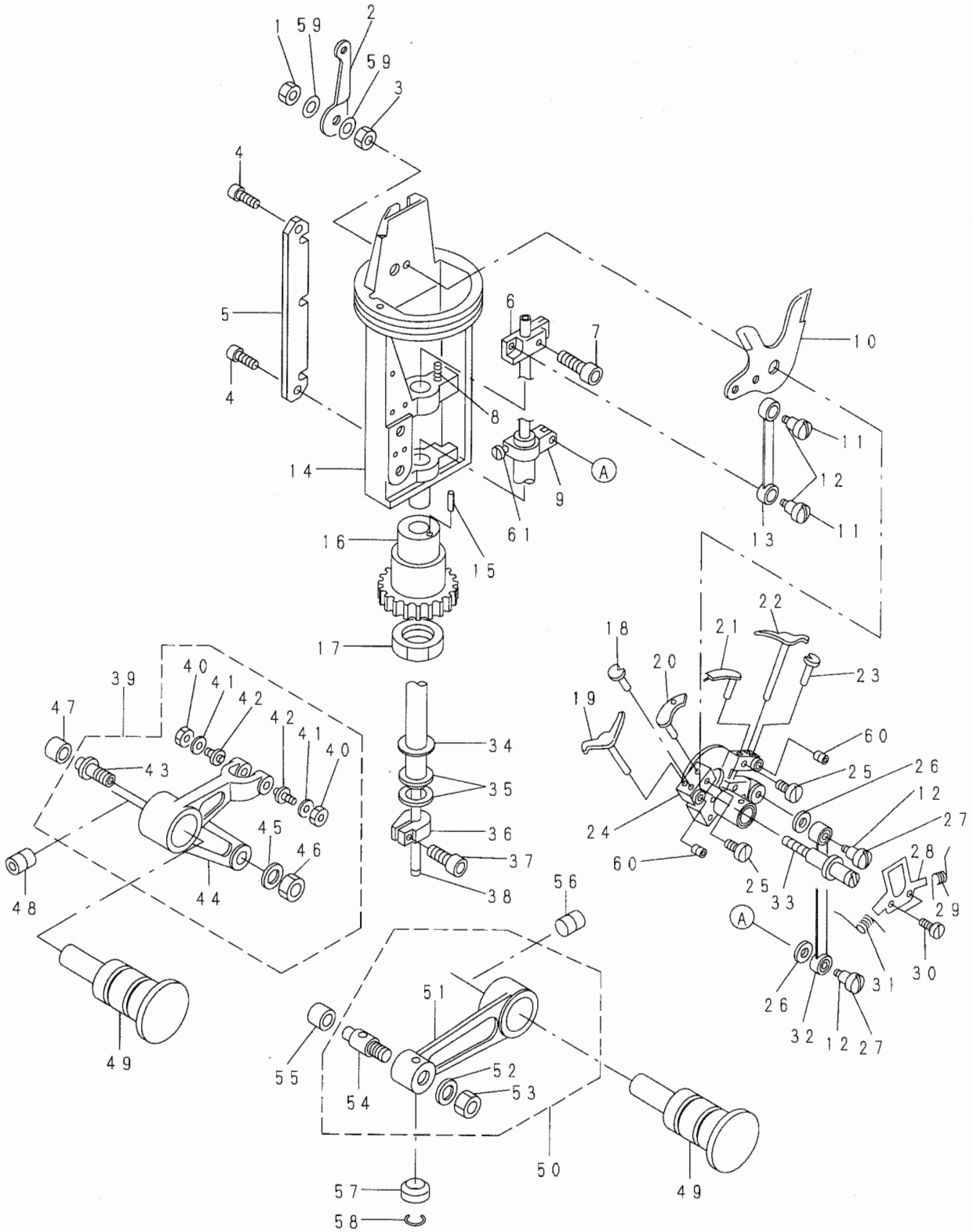
1
59
2
59
3
4
4
5
6
7
8
9
10
11
12
13
14
15
16
17
18
19
20
21
22
23
24
25
26
27
28
29
30
31
32
33
34
35
36
37
38
39
40
41
42
43
44
45
46
47
48
49
50
51
52
53
54
55
56
57
58
59
60
61
A

REF. NO	NOTE	PART NO.	D E S C R I P T I O N	ヒ ン メ イ	Qty
1		NM-6050003-SC	NUT M5X0.8	ロツカクナツト M5X0.8 3シユ	1
2		140-31603	THREAD GUIDE	シンイトカ゛イト゛	1
3		NM-6050003-SC	NUT M5X0.8	ロツカクナツト M5X0.8 3シユ	1
4		SM-6030802-TP	SCREW M3X0.5 L=8	ロツカクアナボ゛ルト M3X0.5 L=8	2
5		140-31900	DRIVING SHAFT GUIDE PLATE	ルーパ゛ークト゛ウシ゛クカ゛イト゛イタ	1
6		140-29508	SPREADER DRIVING SHAFT GUIDE	スプ゛レッダ゛ークト゛ウシ゛クカ゛イト゛	1
7		SM-6041202-TP	SCREW M4X0.7 L=12	ロツカクアナボ゛ルト	1
8		140-32007	SPREADER DRIVING SHAFT SPRING	スプ゛レッダ゛ークト゛ウシ゛クモト゛シバ゛ネ	2
9		140-28807	SPREADER DRIVING SHAFT GUIDE	ルーパ゛ークト゛ウシ゛クカ゛イト゛	1
10		140-30704	SPREADER MOVING CAM	スプ゛レッダ゛ーサト゛ウカム	1
11		140-30605	SCREW	スプ゛レッダ゛ークト゛ウメタルトメネシ゛	2
12		140-30001	METAL	ルーパ゛ークト゛ウメタル	4
13		140-30506	SPREADER DRIVING ROD	スプ゛レッダ゛ークト゛ウロット゛	1
14		140-31702	LOOPER BRACKET	ルーパ゛ーブ゛ラケット	1
15		PS-0200122-KH	SPRING PIN 2.0X12	スプ゛リンク゛ピ゛ン 2.0X12	1
16		140-31801	BRACKET REVOLUTION GEAR	ブ゛ラケットセンカイキ゛ヤ	1
17		140-32106	NUT	ブ゛ラケットセンカイキ゛ヤトメナット	1
18		140-31306	SPREADER STOPPER, LEFT	スプ゛レッダ゛ーストッパ゛ー（ヒダ゛リ）	1
19		140-31108	SPREADER, LEFT	スプ゛レッダ゛ー（ヒダ゛リ）	1
20		140-30902	LOOPER, LEFT	ルーパ゛ー（ヒダ゛リ）	1
21		140-30803	LOOPER, RIGHT	ルーパ゛ー（ミギ゛）	1
22		140-31009	SPREADER, RIGHT	スプ゛レッダ゛ー（ミギ゛）	1
23		140-31207	SPREADER	ストッパ゛ー（ミギ゛）	1
24		140-30209	LOOPER BASE	ルーパ゛ートリツケダ゛イ	1
25		SM-6030600-SP	SCREW M3X0.5 L=6	ヒラコネシ゛ M3X0.5 L=6	2
26		140-30100	WASHER	ルーパ゛ークト゛ウロット゛サ゛カ゛ネ	2
27		140-29904	SCREW	ルーパ゛ークト゛ウロット゛トメネシ゛	2
28		140-31504	NEEDLE PLATE	ハリウケ	1
29		140-32304	SPREADER SPRING, RIGHT	スプ゛レッダ゛ーバ゛ネ（ミギ゛）	1
30		SM-6850600-SP	SCREW	ヒラネシ゛ M2.5 L=6	2
31		140-32403	SPREADER SPRING, LEFT	スプ゛レッダ゛ーバ゛ネ(ヒダ゛リ)	1
32		140-29755	LOOPER DRIVING ROD	ルーパ゛ークト゛ウロット゛（クミ）	1
33		140-30308	LOOPER BASE SHAFT	ルーパ゛ートリツケダ゛イシテンシ゛ク	1
34		140-28559	LOOPER DRIVING SHAFT	ルーパ゛ークト゛ウシ゛ク	1
35		101-12704	THRUST WASHER 1.8	カマシ゛クウワメタル スラストイタ 1.8	2
36		140-28708	LOOPER DRIVING SHAFT COLLAR	ルーパ゛ークト゛ウシ゛クカラー	1
37		SM-6041002-TP	SCREW M4 L=10	ロツカクアナボ゛ルト M4X0.7 L=10	1
38		140-29201	SPREADER DRIVING SHAFT	スプ゛レッダ゛ークト゛ウシ゛ク	1
39		140-28054	LOOPER DRIVING ARM ASM.	ルーパ゛ークト゛ウウテ゛（クミ）	1
40		NM-6050003-SC	NUT M5X0.8	ロツカクナツト M5X0.8 3シユ	(2)
41		WP-0531000-SC	WASHER 5.3X10X1	ヒラサ゛カ゛ネ 5.3X10X1	(2)
42		140-28302	LOOPER DRIVING FORK SHAFT	ルーパ゛ークト゛ウフタマタシ゛ク	(2)
43		140-28104	LOOPER CAM ROLLER SHAFT	ルーパ゛ーカムローラーシ゛ク	(1)
44		140-28005	LOOPER DRIVING ARM	ルーパ゛ークト゛ウウテ゛	(1)
45		WP-0641601-SC	WASHER	ヒラサ゛カ゛ネ ミカ゛キマル M6	(1)
46		NM-6060003-SC	NUT M6	ロツカクナツト M6	(1)
47		140-28203	LOOPER CAM ROLLER	ルーパ゛ーカムローラー	1
48		SM-8060802-TP	SCREW M6 L=8	トメネシ゛ M6 L=8	1
49		140-28401	ARM SUPPORT SHAFT	ルーパ゛ークト゛ウウテ゛シテンシ゛ク	2
50		140-29052	SPREADER DRIVING ARM ASM.	スプ゛レッダ゛ークト゛ウウテ゛（クミ）	1
51		140-29003	SPREADER DRIVING ARM	スプ゛レッダ゛ークト゛ウウテ゛	(1)
52		WP-0641601-SC	WASHER	ヒラサ゛カ゛ネ ミカ゛キマル M6	(1)
53		NM-6060003-SC	NUT M6	ロツカクナツト M6	(1)
54		140-29102	SPREADER CAM ROLLER SHAFT	スプ゛レッダ゛ーカムローラーシ゛ク	(1)
55		140-28203	SPREADER CAM ROLLER	ルーパ゛ーカムローラー	1
56		SM-8060802-TP	SCREW M6 L=8	トメネシ゛ M6 L=8	1
57		140-29300	SPREADER DRIVING SHAFT ROLLER	スプ゛レッダ゛ークト゛ウシ゛クコロ	1
58		140-29409	RING	スプ゛レッダ゛ークト゛ウシ゛クリンク゛	1
59		WP-0531000-SC	WASHER 5.3X10X1	ヒラサ゛カ゛ネ 5.3X10X1	2
60		SM-8030412-TP	SCREW	トメネシ゛ M3 L=4	2
61		SM-5041455-SN	SCREW	ナベ゛ネシ゛	1

12. MAIN CAM & PATTERN CAM COMPONENTS

主カム・パターンカム関係

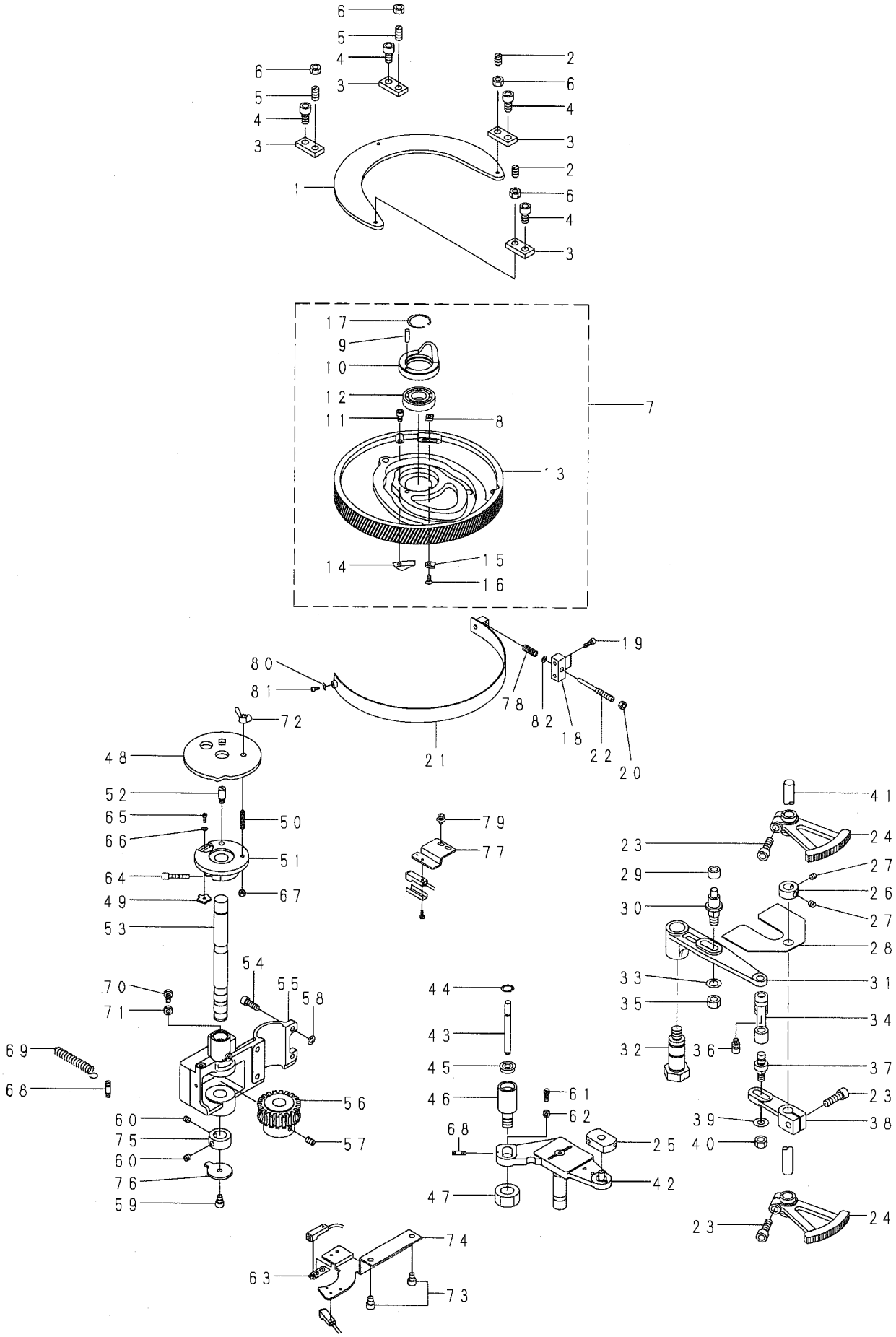

REF. NO	NOTE	PART NO.	D E S C R I P T I O N	ヒ ン メ イ	Qty
1		140-33005	MAIN CAM PRESSER	ﾒｲﾝｶﾑｵｻｴ	1
2		140-33203	ADJUSTING SCREW A	ﾒｲﾝｶﾑｵｻｴﾁｮｳｾﾂﾈｼﾞ A	2
3		140-33104	ADJUSTING BASE	ﾒｲﾝｶﾑｵｻｴﾍﾞｰｽ	4
4		SM-6081542-CP	SCREW M8X1.25 L=15	ﾛｯｶｸｱﾅﾎﾞﾙﾄ M8 L=15	4
5		SM-8511650-TP	SCREW	ﾄﾒﾈｼﾞ M8X0.75 L=16	2
6		NM-6510515-SC	NUT	ﾛｯｶｸﾅｯﾄ M8X0.75 H=5 3ｼｭ	4
7		140-32551	MAIN CAM ASM.	ﾒｲﾝｶﾑ (ｸﾐ)	1
8		140-32908	CLAMP MOVING GUIDE NUT	ｸﾗﾝﾌﾟｷﾄﾞｳｶﾞｲﾄﾞﾅｯﾄ	(1)
9		PH-0500165-S0	PIN	ﾍｲｺｳﾋﾟﾝ ﾏﾙ5X16	(1)
10		140-32601	KNIFE MOVING CAM	ﾒｽｻﾄﾞｳｶﾑ	(1)
11		SM-6050802-TP	SCREW M5X0.8 L=8	ﾛｯｶｸｱﾅﾎﾞﾙﾄ M5X0.7 L=8	(2)
12		SB-3250002-00	BEARING	ｺﾛｶﾞﾘｼﾞｸｳｹ	(1)
13		140-32502	MAIN CAM	ﾒｲﾝｶﾑ	(1)
14		140-32700	CLAMP MOVING CAM	ｸﾗﾝﾌﾟｻﾄﾞｳｶﾑ	(2)
15		140-32809	CLAMP STARTING ARM GUIDE PLATE	ｸﾗﾝﾌﾟｷﾄﾞｳﾃﾞｶﾞｲﾄﾞｲﾀ	(1)
16		SM-1041001-SP	SCREW M4X0.7 L=10	ｻﾗｺﾈｼﾞ M4X0.7 L=10	(1)
17		RC-3200002-K0	RETAINING RING	Cｶﾞﾀﾄﾒﾜ 29.3	(1)
18		140-33807	BRAKE BAND BASE	ﾌﾞﾚｰｷﾊﾞﾝﾄﾞ ﾄﾒﾀﾞｲ	1
19		SM-6041202-TP	SCREW M4X0.7 L=12	ﾛｯｶｸｱﾅﾎﾞﾙﾄ	2
20		NM-6060001-SC	NUT M6	ﾛｯｶｸﾅｯﾄ M6 1ｼｭ	1
21		140-33450	BRAKE BAND	ﾌﾞﾚｰｷﾊﾞﾝﾄﾞ (ｸﾐ)	1
22		140-33708	SCREW	ﾌﾞﾚｰｷﾊﾞﾝﾄﾞﾁｮｳｾｲﾈｼﾞ	1
23		SM-6082502-TP	SCREW M8 L=25	ﾛｯｶｸｱﾅﾎﾞﾙﾄ	3
24		140-34706	NEEDLE BAR ROTARY GEAR	ﾊﾘﾎﾞｳｾﾝｶｲｸﾄﾞｳｷﾞﾔｰ	2
25		140-25605	PATTERN DRIVING ARM BLOCK	ﾍﾞｯﾄﾞﾌﾟﾚｰﾄｵｸﾘｼﾞｸｶｸｺﾞﾏ	1
26		CS-1201010-SH	THRUST COLLAR ASM. D=12 W=10	ｽﾗｽﾄｳｹ D=12 W=10 ｸﾐ	1
27		SS-8660610-TP	SCREW 1/4-40 L=6	ﾄﾒﾈｼﾞ 1/4-40 L=6	2
28		140-34805	MAIN CAM LID	ﾒｲﾝｶﾑﾌﾀ	1
29		140-25704	BRACKET DRIVING ROLLER	ﾍﾞｯﾄﾞﾌﾟﾚｰﾄｵｸﾘｺﾛ	1
30		140-34201	BRACKET DRIVING ROLLER SHAFT	ﾌﾞﾗｹｯﾄｸﾄﾞｳﾛｰﾗｰｼﾞｸ	1
31		140-34003	BRACKET DRIVING ARM	ﾌﾞﾗｹｯﾄｸﾄﾞｳﾃﾞ	1
32		140-34102	DRIVING ARM FULCRUM SHAFT	ﾌﾞﾗｹｯﾄｸﾄﾞｳﾃﾞｼﾃﾝｼﾞｸ	1
33		WP-1052000-SC	WASHER 10.5X18X2	ﾋﾗｻﾞｶﾞﾈ 10.5X18X2	1
34		140-34300	BRACKET DRIVING LINK	ﾌﾞﾗｹｯﾄｸﾄﾞｳﾘﾝｸ	1
35		NM-6550815-SF	NUT	ﾒｰﾄﾙﾅｯﾄ	1
36		140-34409	BRACKET DRIVING LINK SHAFT	ﾌﾞﾗｹｯﾄｸﾄﾞｳﾘﾝｸｼﾞｸ	1
37		140-34607	BRACKET REVOLUTION ARM SHAFT	ﾌﾞﾗｹｯﾄｾﾝｶｲｳﾃﾞｼﾞｸ	1
38		140-34508	BRACKET ROTARY ARM	ﾌﾞﾗｹｯﾄｾﾝｶｲｳﾃﾞ	1
39		WP-0850002-SC	WASHER 8.5X18X1.6	ﾋﾗｻﾞｶﾞﾈ 8.5X18X1.6	1
40		NM-6080001-SC	NUT M8X1.25	ﾛｯｶｸﾅｯﾄ M8 1ｼｭ	1
41		140-34904	BRACKET REVOLUTION SHAFT	ﾌﾞﾗｹｯﾄｾﾝｶｲｼﾞｸ	1
42		140-35950	PATTERN CAM MOVING ARM	ﾊﾟﾀｰﾝｸﾄﾞｳﾃﾞ (ｸﾐ)	1
43		140-35703	PATTERN CAM ROLLER	ﾊﾟﾀｰﾝｶﾑﾛｰﾗ	1
44		RC-0650811-KP	RETAINING RING	Cｶﾞﾀﾄﾒﾜ	2
45		SB-1070005-00	BARING	ｺﾛｶﾞﾘｼﾞｸｳｹ	1
46		140-35802	BEARING INSTALLING BASE	ﾊﾟﾀｰﾝｶﾑﾍﾞｱﾘﾝｸﾞﾄﾘﾂｹﾀﾞｲ	1
47		NM-6160003-SB	NUT M16	ﾛｯｶｸﾅｯﾄ M16 3ｼｭ	1
48		140-37006	PATTERN CAM(FRONT KNIFE)	ﾊﾟﾀｰﾝｶﾑ (ｻｷﾒｽ)	1
49		140-36305	STITCH LENGTH SENSOR PLATE	ﾋﾟｯﾁｾﾝｻｶﾝﾁｲﾀ	1
50		SM-8042502-TP	SCREW M4X0.7 L=25	ﾄﾒﾈｼﾞ M4X0.7 L=25	1
51		140-35109	PATTERN CAM INSTALLING BASE	ﾊﾟﾀｰﾝｶﾑﾄﾘﾂｹﾀﾞｲ	1
52		140-35307	PATTERN CAM POSITIONING SHAFT	ﾊﾟﾀｰﾝｶﾑｲﾁｷﾒｼﾞｸ	1
53		140-35000	PATTERN CAM SHAFT	ﾊﾟﾀｰﾝｶﾑｼﾞｸ	1
54		SM-6061802-TP	SCREW M6 L=18	ﾛｯｶｸｱﾅﾎﾞﾙﾄ	4
55		140-35505	PATTERN CAM BASE	ﾊﾟﾀｰﾝｶﾑﾄﾞﾀﾞｲ	1
56		140-35604	PATTERN CAM GEAR	ﾊﾟﾀｰﾝｶﾑｳｫｰﾑﾎｲｰﾙ	1
57		SM-8061002-TP	SCREW M6 L=10	ﾄﾒﾈｼﾞ M6 L=10	2
58	#01	WP-0600116-KP	WASHER	ﾋﾗｻﾞｶﾞﾈ	2
59		SM-6060802-TP	SCREW M6 L=8	ﾛｯｶｸｱﾅﾎﾞﾙﾄ M6 L=8	1
60		SS-8660610-TP	SCREW 1/4-40 L=6	ﾄﾒﾈｼﾞ 1/4-40 L=6	2
61		SM-6041602-TP	SCREW M4X0.7 L=16	ﾛｯｶｸｱﾅﾎﾞﾙﾄ M4X0.7 L=16	1
62		NM-6040001-SC	NUT M4	ﾛｯｶｸﾅｯﾄ M4	1
63		HD-0006600-10	SENSOR BRACKET	ｾﾝｻｰ ﾄﾘﾂｹｶﾅｸﾞ	1
64		SM-6082502-TP	SCREW M8 L=25	ﾛｯｶｸｱﾅﾎﾞﾙﾄ	1
65		SM-6030802-TP	SCREW M3X0.5 L=8	ﾛｯｶｸｱﾅﾎﾞﾙﾄ M3X0.5 L=8	1
66		WP-0320501-SD	WASHER	ﾋﾗｻﾞｶﾞﾈ ﾐｶﾞｷﾏﾙ M3	1
67		NM-6040001-SC	NUT M4	ﾛｯｶｸﾅｯﾄ M4	1
68		B1506-352-000	TENSION SPRING RACK B	ﾋﾂﾊﾟﾘ ﾊﾞﾈｶｹ B	2
69		140-36206	PATTERN CAM DRIVING SPRING	ﾊﾟﾀｰﾝｸﾄﾞｳﾃﾞﾊﾞﾈ	1
70		SM-9051203-SD	BOLT M5X12	ﾛｯｶｸﾎﾞﾙﾄ M5X0.8 L=12	1
71		NM-6050003-SC	NUT M5X0.8	ﾛｯｶｸﾅｯﾄ M5X0.8 3ｼｭ	1
72		NM-9040001-SC	WING NUT M4	ﾁｮｰﾅｯﾄ	1
73		SM-6060802-TP	SCREW M6 L=8	ﾛｯｶｸｱﾅﾎﾞﾙﾄ M6 L=8	2
74		140-36602	HP SENSOR INSTALLING PLATE	HPｾﾝｻｰﾄﾘﾂｹﾀﾞｲ	1
75		CS-1601211-TH	THRUST COLLAR	ｽﾗｽﾄｳｹ	1
76		140-36503	HP SENSOR PLATE	HPｾﾝｻｶﾝﾁｲﾀ	1
77		140-36404	INSTALLING BASE	ﾋﾟｯﾁｾﾝｻﾄﾘﾂｹﾀﾞｲ	1
78		140-33906	BRAKE BAND SPRING	ﾌﾞﾚｰｷﾊﾞﾝﾄﾞﾊﾞﾈ	1
79		SL-4041091-SC	SCREW M4 X 10	ﾅﾍﾞｺﾈｼﾞ ｾﾑｽ M4X0.7 L=10	2
80		WP-0380516-SD	WASHER	ﾋﾗｻﾞｶﾞﾈ	1
81		SM-6030602-TP	SCREW M3X0.5 L=6	ﾛｯｶｸｱﾅﾎﾞﾙﾄ M3X0.5 L=6	1
82		WP-0430800-SC	WASHER M4	ﾋﾗｻﾞｶﾞﾈ ｺｶﾞﾀﾏﾙ M4	1

NOTE (注記)　　#01....SELECTING PART　　選択使用

メス関係

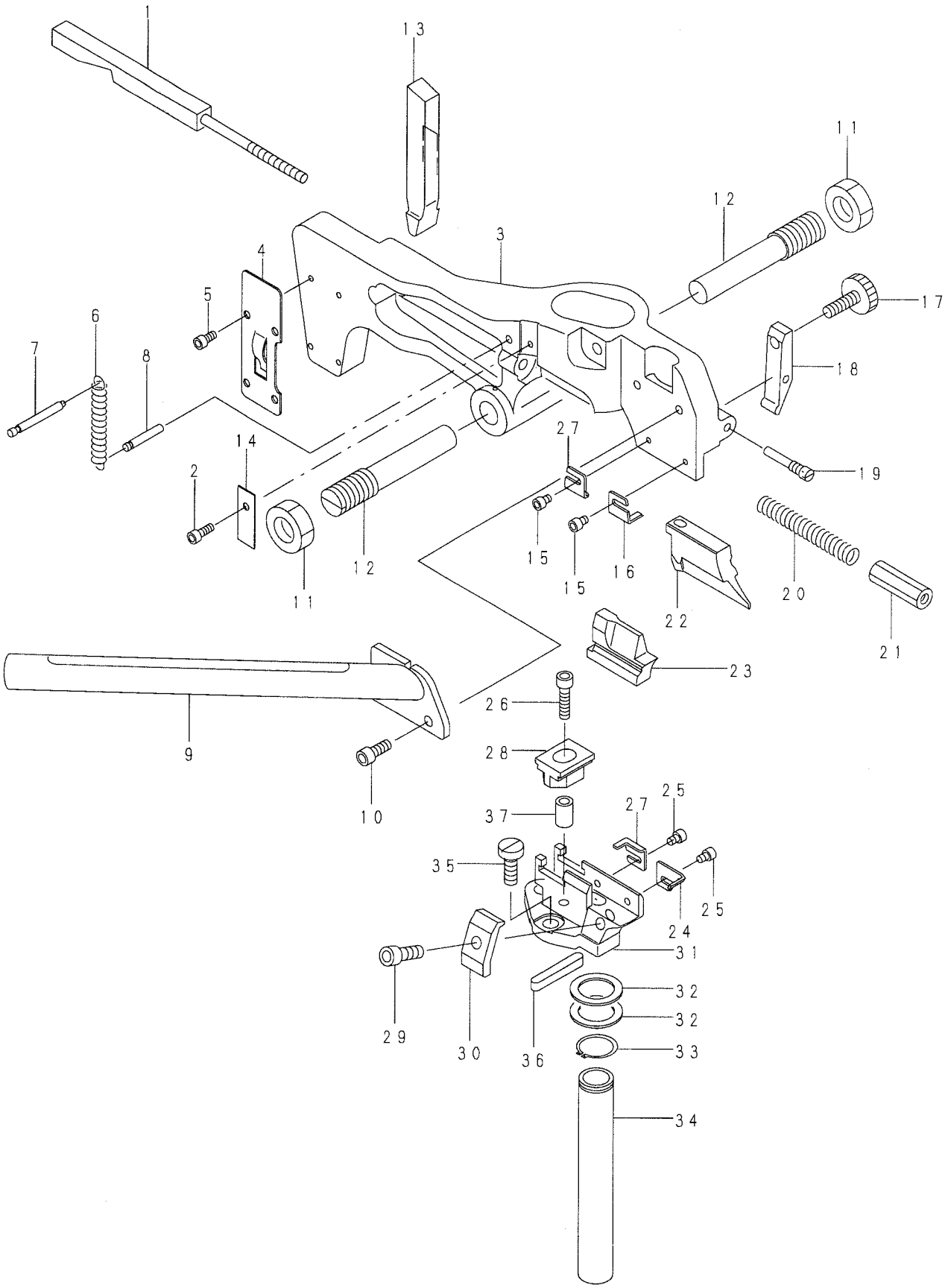
1
13
11
12
3
4
5
6
7
8
17
18
27
14
2
19
15
16
15
12
11
20
22
21
23
26
9
28
10
37
27
25
35
25
24
31
32
32
29
30
36
33
34

REF.NO	NOTE	PART NO.	DESCRIPTION	ヒョウメイ	Qty
1		140-39804	CAM	ﾒｽｱﾂﾁｮｳｾﾂｶﾑ	1
2		SM-6030802-TP	SCREW M3X0.5 L=8	ﾛｯｶｸｱﾅﾎﾞﾙﾄ M3X0.5 L=8	1
3		140-39002	KNIFE ARM	ﾒｽｳﾃﾞ	1
4		140-39705	KNIFE MOVING ARM LID	ﾒｽｻﾄﾞｳｳﾃﾞ ﾌﾀ	1
5		SM-6030602-TP	SCREW M3X0.5 L=6	ﾛｯｶｸｱﾅﾎﾞﾙﾄ M3X0.5 L=6	4
6		140-40208	KNIDE ARM SPRING	ﾒｽｳﾃﾞﾓﾄﾞｼﾊﾞﾈ	1
7		B3423-180-000	ANCHOR	ｷﾄﾞｰｳﾃﾞ ﾊﾞﾈｶｹ A	1
8		B3434-180-000	ANCHOR	ｽﾍﾟﾘｼﾞｸ ｳﾃﾞ ﾊﾞﾈｶｹ	1
9		140-40356	DUST BOX COMPLE.	ﾇﾉｸｽﾞｼｭｰﾄｳｴ ｹｯｺﾞｳ	1
10		SM-6041002-SC	SCREW	ﾛｯｶｸｱﾅﾎﾞﾙﾄ	2
11		NM-6610515-SC	NUT	ﾛｯｶｸﾅｯﾄ M12X1 H=5 3ｼｭ	2
12		140-39101	KNIFE ARM FULCRUM SHAFT	ﾒｽｳﾃﾞｼﾃﾝｼﾞｸ	2
13		140-39606	KNIFE MOVING ARM	ﾒｽｻﾄﾞｳｳﾃﾞ	1
14		140-40109	NUT FIXED PLATE	ﾒｽｱﾂﾁｮｳｾﾂﾅｯﾄｺﾃｲｲﾀ	1
15		SM-6030402-TP	SCREW M3X0.5 L=4	ﾛｯｶｸｱﾅﾎﾞﾙﾄ	2
16		140-39200	KNIFE STOPPER	ﾒｽｽﾄｯﾊﾟｰ (ｳｴ)	1
17		140-39408	SCREW	ﾒｽｺﾃｲﾈｼﾞ	1
18		140-39309	KNIFE FIXED PLATE(UPPER)	ﾒｽｺﾃｲｲﾀ (ｳｴ)	1
19		140-39507	SCREW	ﾒｽｺﾃｲｲﾀｼﾃﾝﾈｼﾞ	1
20		140-39903	SPRING	ﾒｽｱﾂﾁｮｳｾﾂｶﾑﾊﾞﾈ	1
21		140-40000	NUT	ﾒｽｱﾂﾁｮｳｾﾂﾅｯﾄ	1
22		140-41206	CLOTH CUTTING KNIFE(EYELET)	ﾇﾉｷﾘﾒｽ (ﾊﾄﾒ)	1
23		140-41909	KNIFE SUPPORT 22(EYELET)	ﾒｽｳｹ 22MM(ﾊﾄﾒ)	1
24		140-40901	KNIFE STOPPER(LOWER)	ﾒｽｽﾄｯﾊﾟｰ (ｼﾀ)	1
25		SM-6030402-TP	SCREW M3X0.5 L=4	ﾛｯｶｸｱﾅﾎﾞﾙﾄ	2
26		SM-6041602-TP	SCREW M4X0.7 L=16	ﾛｯｶｸｱﾅﾎﾞﾙﾄ M4X0.7 L=16	1
27		140-40802	KNIFE STOPPER (UPPER,LOWER)	ﾒｽｽﾄｯﾊﾟｰ (ｼﾞｮｳｹﾞ)	2
28		140-41008	CLAMP SLIDE CAM	ｸﾗﾝﾌﾟｽﾗｲﾄﾞｶﾑ	1
29		SM-9051400-SN	SCREW	ﾛｯｶｸﾎﾞﾙﾄ	1
30		140-40703	KNIFE FIXED PLATE(LOWER)	ﾒｽｺﾃｲｲﾀ (ｼﾀ)	1
31		140-40505	KNIFE BASE	ﾒｽﾄﾞﾀﾞｲ	1
32		B1149-352-000	GASKET	ｵｸﾘﾁﾖｰｾﾂｱﾅ ﾈｼﾞ ﾊﾟｯｷﾝ	2
33		RC-1400001-KP	C-SHAPED SNAP RING	Cｶﾞﾀﾄﾒﾜ	1
34		140-41107	DUST CHUTE, LOWER	ﾇﾉｸｽﾞｼｭｰﾄ ｼﾀ	1
35		SM-6051400-SP	SCREW	ﾋﾗﾈｼﾞ	3
36		140-21604	KEY	ｸﾗｯﾁｷｰ	1
37		140-43400	CLAMP SLIDE COLLAR	ｸﾗﾝﾌﾟｽﾗｲﾄﾞ ｶﾑｶﾗｰ	1

天秤・糸案内関係（２）

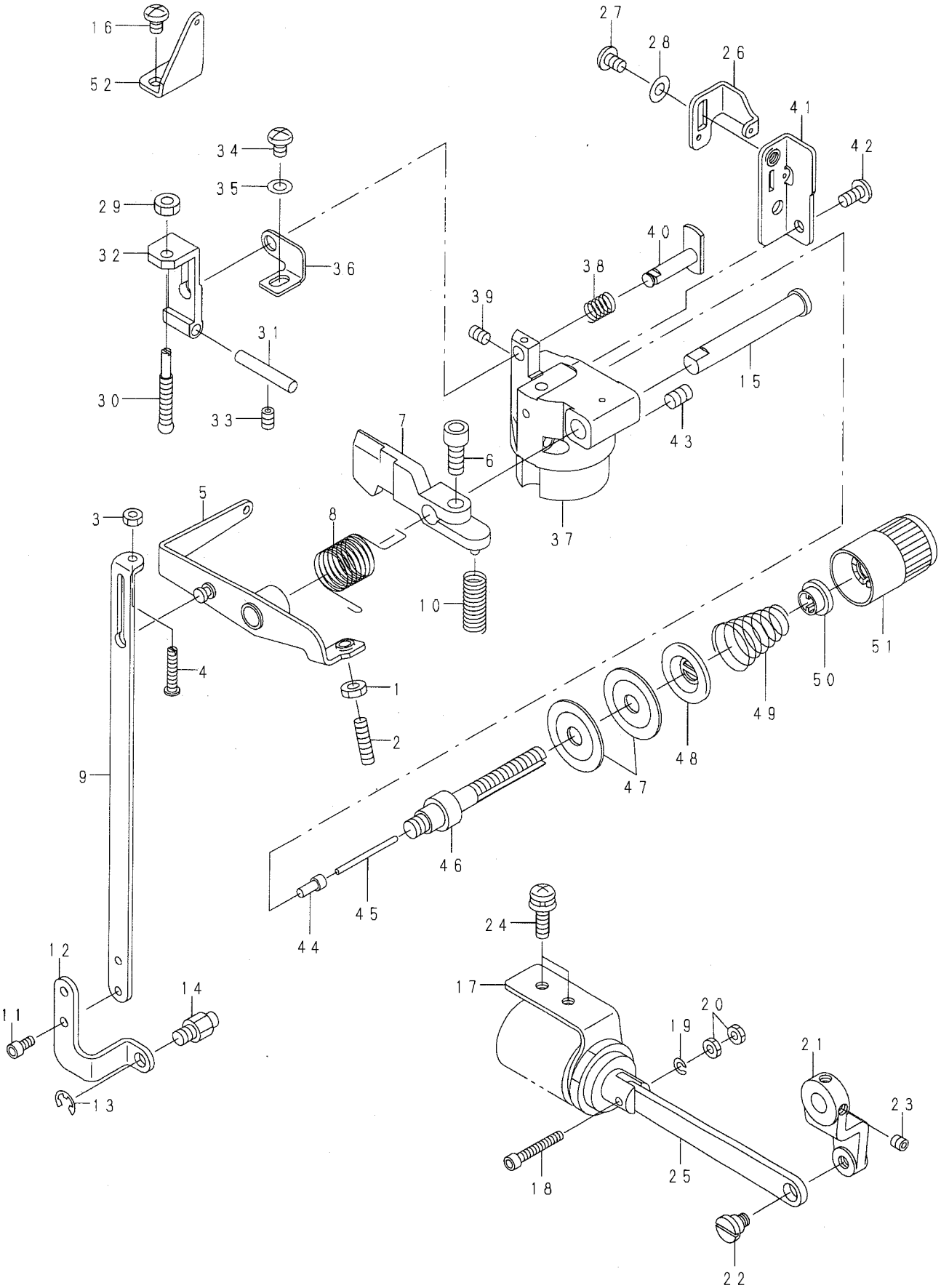
16
52
27
28
26
41
42
34
35
29
32
36
40
38
39
31
30
33
15
43
7
6
37
5
3
8
10
4
1
2
9
51
50
49
48
47
46
45
44
12
14
11
13
24
17
20
19
21
23
18
25
22

REF. NO	NOTE	PART NO.	DESCRIPTION	ヒ ン メ イ	Qty
1		NM-6040003-SC	NUT M4	ﾛﾂｶｸﾅﾂﾄ M4	1
2		SM-8041552-TP	SCREW M4 L=15	ﾄﾒﾈｼﾞ	1
3		NM-6030001-SN	NUT	ﾛﾂｶｸﾅﾂﾄ	1
4		140-49308	ADJUSTING SCREW	ﾊﾘｲﾄｸﾘﾀﾞｼﾘﾝｸﾁｮｳｾﾂﾈｼﾞ	1
5		140-48557	DRAW LINK COMPLE.	ﾊﾘｲﾄｸﾘﾀﾞｼﾘﾝｸ (ｸﾐ)	1
6		SM-6051202-TP	SCREW M5X0.8 L=12	ﾛﾂｶｸｱﾅﾎﾞﾙﾄ M5X0.8 L=12	1
7		140-48102	DISK RELEASING DRIVING ARM	ｻﾗﾕﾙﾒｸﾄﾞｳﾃﾞ	1
8		140-48409	NEEDLE THREAD DRAW LINK SPRING	ﾊﾘｲﾄｸﾘﾀﾞｼﾘﾝｸｳﾃﾞﾊﾞﾈ	1
9		140-49209	NEEDLE THREAD DRAW LINK	ﾊﾘｲﾄｸﾘﾀﾞｼﾘﾝｸ	1
10		140-48201	SPRING	ｻﾗﾕﾙﾒｸﾄﾞｳﾃﾞﾊﾞﾈ	1
11		SM-6030602-TP	SCREW M3X0.5 L=6	ﾛﾂｶｸｱﾅﾎﾞﾙﾄ M3X0.5 L=6	2
12		140-49407	CONNECTING LINK	ﾊﾘｲﾄｸﾘﾀﾞｼﾚﾝｹﾂﾘﾝｸ	1
13		RE-0400000-K0	E-RING 4	Eｶﾞﾀﾄﾒﾜ 4	1
14		140-49506	CONNECTING LINK SHAFT	ﾊﾘｲﾄｸﾘﾀﾞｼﾚﾝｹﾂﾘﾝｸｼﾞｸ	1
15		140-48300	LINK ARM SHAFT	ﾊﾘｲﾄｸﾘﾀﾞｼﾘﾝｸｳﾃﾞ ｼﾃﾝｼﾞｸ	1
16		SM-4040655-SN	SCREW M4X0.7 L=6	ﾅﾍﾞｺﾈｼﾞ M4 L=6	2
17		140-49100	SOLENOID INSTALLING PLATE	ｿﾚﾉｲﾄﾞﾄﾘﾂｹｲﾀ	1
18		SM-6032002-TN	SCREW M3X0.5 L=20	ﾛﾂｶｸｱﾅﾎﾞﾙﾄ M3X0.5 L=20	1
19		WS-0310002-KR	SPRING WASHER 3.1X5.9X0.7	ﾊﾞﾈｻﾞｶﾞﾈ 3.1X5.9X0.7	1
20		NM-6030003-SC	NUT M3	ﾛﾂｶｸﾅﾂﾄ M3	2
21		140-48904	DISK RELEASING LINK B	ｻﾗﾕﾙﾒﾘﾝｸ (B)	1
22		SD-0640321-SP	HINGE SCREW D= 6.35 H= 3.2	ﾀﾞﾝﾈｼﾞ D=6.35 H=3.2	1
23		SM-8040402-TP	SCREW M4X0.7 L=4	ﾄﾒﾈｼﾞ M4X0.7 L=4	2
24		SL-4041691-SC	SCREW M4 X 10	ﾅﾍﾞｺﾈｼﾞ ｾﾑｽ M4X0.7 L=16	2
25		140-48805	DISK RELEASING LINK A	ｻﾗﾕﾙﾒﾘﾝｸ (A)	1
26		140-47807	NEEDLE THREAD ADJUSTING GUIDE	ﾊﾘｲﾄﾁｮｳｾﾂｲﾄｱﾝﾅｲ	1
27		SM-4040655-SN	SCREW M4X0.7 L=6	ﾅﾍﾞｺﾈｼﾞ M4 L=6	1
28		WP-0430801-SC	WASHER 4.3X9X0.8	ﾋﾗｻﾞｶﾞﾈ 4.3X9X0.8	1
29		NM-6040001-SD	NUT M4	ﾛﾂｶｸﾅﾂﾄ M4	1
30		140-47906	ADJUSTING SCREW	ｸﾄﾞｳｲﾀﾁｮｳｾﾂﾈｼﾞ	1
31		B1147-141-H00	PIN	ｵｸﾘ ﾁｮｳｾﾂ ﾋﾟﾝ	1
32		140-47708	DRIVING PLATE	ﾊﾘｲﾄｵｻｴﾋﾟﾝｸﾄﾞｳｲﾀ	1
33		SM-8040602-TP	SCREW M4X0.7 L=6	ﾄﾒﾈｼﾞ	1
34		SM-4040655-SP	SCREW	ﾅﾍﾞｺﾈｼﾞ M4 L=6	1
35		WP-0430800-SD	WASHER M4	ﾋﾗｻﾞｶﾞﾈ ｺｶﾞﾀﾏﾙ M4	1
36		140-47609	ADJUSTING PLATE	ﾊﾘｲﾄｵｻｴﾋﾟﾝﾊﾞﾈ ﾁｮｳｾｲｲﾀ	1
37		140-46809	UPPER THREAD ADJUSTING BASE	ｳﾜｲﾄﾁｮｳｼﾀﾞｲ	1
38		140-47500	SPRING	ﾊﾘｲﾄｵｻｴﾋﾟﾝﾊﾞﾈ	1
39		SM-8040602-TP	SCREW M4X0.7 L=6	ﾄﾒﾈｼﾞ	1
40		140-47401	NEEDLE THREAD PRESSER PIN	ﾊﾘｲﾄｵｻｴﾋﾟﾝ	1
41		140-47302	NEEDLE THREAD PRESSER PLATE	ﾊﾘｲﾄｵｻｴｲﾀ	1
42		SM-5040855-SN	SCREW	ﾊﾞｲﾝﾄﾞﾈｼﾞ	1
43		SM-8050812-TP	SCREW M5X8	ﾄﾒﾈｼﾞ M5X0.8 L=8	1
44		140-47203	DISK RELEASING PIN SHAFT	ｻﾗﾕﾙﾒﾋﾟﾝｵｼｼﾞｸ	1
45		B3118-552-G00	TENSION RELEASE PIN	ｲﾄﾕﾙﾒ ﾋﾟﾝ G	1
46		140-46908	UPPER THREAD ADJUSTING BAR	ｳﾜｲﾄﾁｮｳｼﾎﾞｳ	1
47		B3126-012-000	THREAD TENSION DISK	ｲﾄﾁｮｰｼｻﾗ	2
48		B3132-552-000	THREAD TENSION DISK PRESSER	ｲﾄﾁｮｰｼ ｻﾗｵｻｴ	1
49		140-47005	SPRING	ｳﾜｲﾄﾁｮｳｼﾊﾞﾈ	1
50		B3112-704-000	TENSION SPRING BUSHING	ﾊﾞﾈ ﾌﾞｯｼｭ	1
51		121-26819	KNOB ,RED	ｲﾄﾁｮｳｼﾂﾏﾐ ｱｶ	1
52		140-49605	UPPER THREAD TENSION GUIDE A	ﾊﾘｲﾄｲﾄｱﾝﾅｲ A	1

糸切り関係

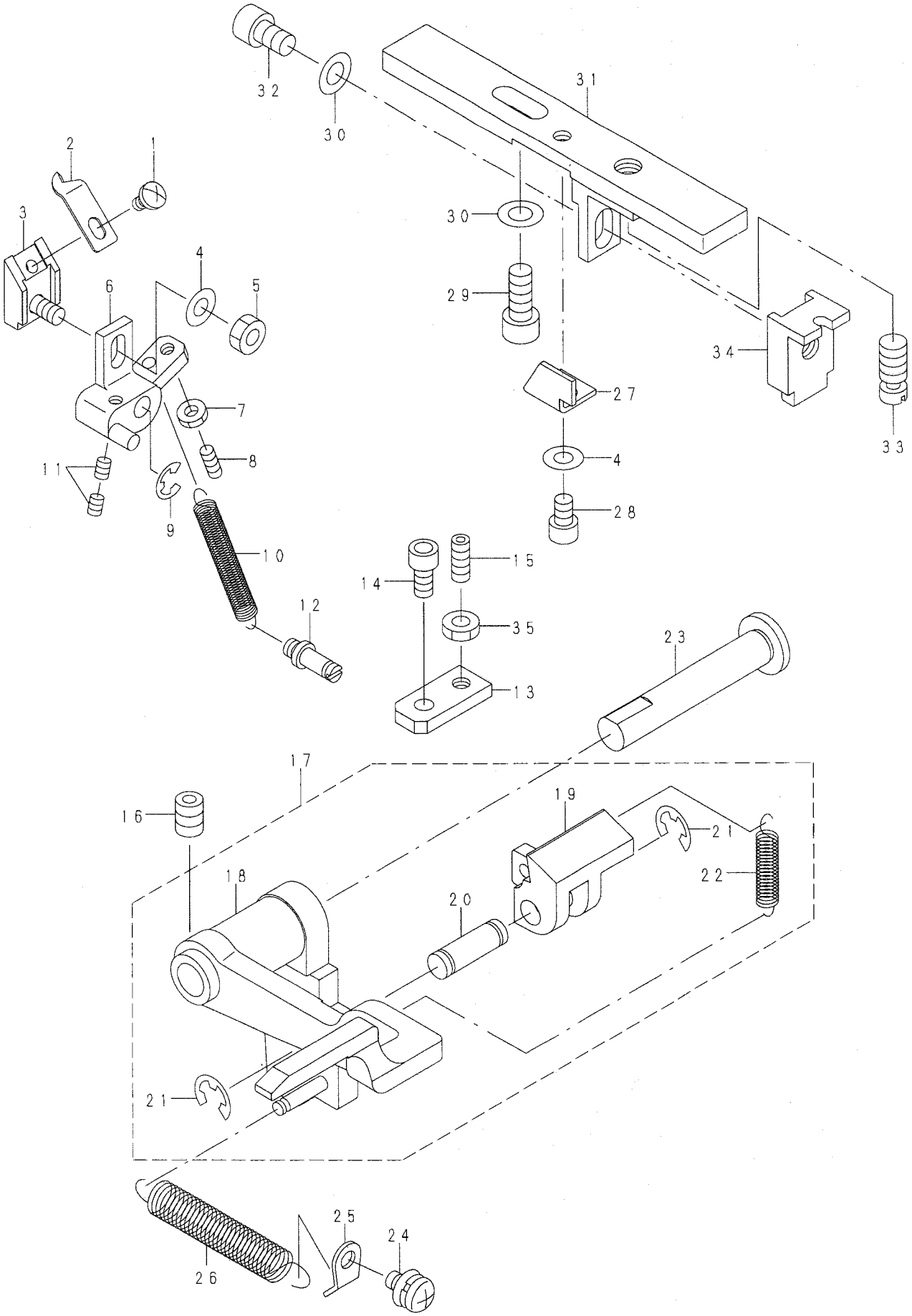

32
30
31
2
1
3
30
4
5
6
29
34
27
7
33
8
11
4
9
28
10
15
14
12
35
23
13
17
19
16
21
18
22
20
21
25
24
26

REF. NO	NOTE	PART NO.	DESCRIPTION	ヒ ン メ イ	Qty
1		SM-4030455-SN	SCREW	ナベ ｺﾈｼﾞ M3 L=4	1
2		140-50009	NEEDLE THREAD CUTTER KNIFE	ハリイトキリメス	1
3		140-50157	ADJUSTING BASE ASM.	ハリイトキリメス チヨウセツダイ (クミ)	1
4		WP-0430801-SE	WASHER 4.3X9X0.8	ヒラザ ｶﾞﾈ ミｶﾞｷﾏﾙ M4	2
5		NM-6040001-SN	NUT M4X0.7	6カクナツト M4	1
6		140-50306	DRIVING ARM	ハリイトキリメスサト ｳｳﾃﾞ	1
7		NM-6030003-SC	NUT M3	ロツカクナツト M3	1
8		SM-8030802-TP	SCREW M3X0.5 L=8	トメネジ	1
9		RE-0400000-K0	E-RING 4	Eｶﾞﾀトメワ 4	1
10		140-50405	RETURN SPRING	メスサト ｳｳﾃﾞ ﾓﾄﾞ ｼﾊﾞﾈ	1
11		SM-8030450-TP	SCREW M3 L=3.5	トメネジ M3 L=3.5	2
12		178-50603	SPRING PACK SHAFT	ﾊﾞﾈｶｹｼﾞｸ	1
13		140-51908	STOPPER BASE	イトキリメスクト ｳｳﾃﾞ ｽﾄｯﾊﾟｰ	1
14		SM-6040802-TP	SCREW M4X0.7 L=8	ロツカクアナボ ﾙﾄ	1
15		SM-8041012-TP	SCREW M4X10	トメネジ M4X0.7 L=10	1
16		SM-8060802-TP	SCREW M6 L=8	トメネジ M6 L=8	1
17		140-50660	CUTTER DRIVING ARM COMPLE.	イトキリメスクト ｳｳﾃﾞ ソウクミ	1
18		140-50652	CUTTER DRIVING ARM ASM.	イトキリメスクト ｳｳﾃﾞ (クミ)	(1)
19		140-50959	DRIVING LINK ASM.	イトキリメスクト ｳｳﾃﾞ ﾘﾝｸ (クミ)	(1)
20		140-51007	FULCRUM SHAFT	クト ｳｳﾃﾞ ﾘﾝｸｼﾃﾝｼﾞｸ	(1)
21		RE-0500000-K0	E-RING	Eｶﾞﾀトメワ 5	(2)
22		140-51106	RETURN SPRING	クト ｳｳﾃﾞ ﾘﾝｸﾓﾄﾞ ｼﾊﾞﾈ	(1)
23		140-51205	FULCRUM SHAFT	イトキリメスクト ｳｳﾃﾞ ｼﾃﾝｼﾞｸ	1
24		SL-4040891-SC	SCREW M4 L=8	ｻﾞｶﾞﾈﾂｷ ナベ ｺﾈｼﾞ M4 L=8	1
25		140-16901	SPRING HOOK	クト ｳｳﾃﾞ ﾓﾄﾞ ｼﾊﾞﾈｶｹ	1
26		140-51304	RETURN SPRING	イトキリメスクト ｳｳﾃﾞ ﾓﾄﾞ ｼﾊﾞﾈ	1
27		140-51601	STOPPER	イトキリチヨウセツダ イストッパ ｰ	1
28		SM-6040602-TP	SCREW M4 L=6	ロツカクアナボ ﾙﾄ M4X0.7 L=6	1
29		SM-6051202-TP	SCREW M5X0.8 L=12	ロツカクアナボ ﾙﾄ M5X0.8 L=12	1
30		WP-0531000-SC	WASHER 5.3X10X1	ヒラザ ｶﾞﾈ 5.3X10X1	2
31		140-51502	THREAD CUTTER ADJUSTING BASE	イトキリチヨウセツダ イ	1
32		SM-6050802-TP	SCREW M5X0.8 L=8	ロツカクアナボ ﾙﾄ M5X0.7 L=8	1
33		140-51809	ADJUSTING SCREW	イトキリクト ｳｺﾏﾁﾖｳｾｲﾈｼﾞ	1
34		140-51700	THREAD CUTTER DRIVING BLOCK	イトキリクト ｳｺﾏ	1
35		NM-6040003-SC	NUT M4	ロツカクナツト M4	1

給油関係

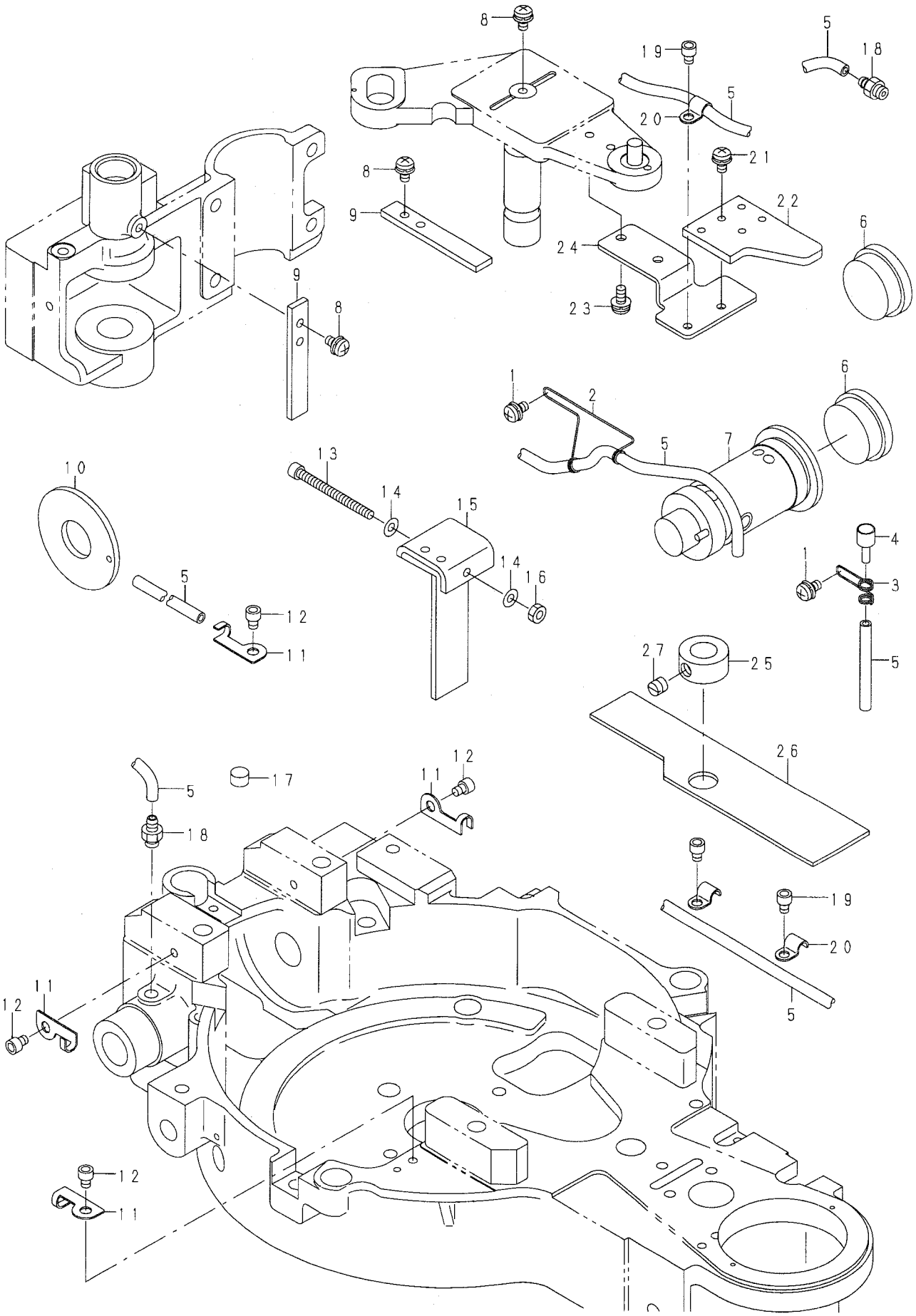
8
19
5
18
5
20
21
8
9
22
6
24
9
8
23
1
2
6
5
7
10
13
14
15
4
14
16
1
3
5
12
11
27
25
5
26
12
11
17
5
18
19
20
5
11
12
12
11

REF. NO	NOTE	PART NO.	D E S C R I P T I O N	ヒ ン メ イ	Qty
1		SL-4040891-SC	SCREW M4 L=8	ｻﾞｶﾞﾈｼﾞｷ ﾅﾍﾞｺﾈｼﾞ M4 L=8	2
2		140-52401	SPRING	ﾊﾘﾎﾞｳﾕｼﾝｵｻｴﾊﾞﾈ	1
3		140-52302	SPRING	ｵｲﾙﾁｭｳﾆｭｳﾊﾟｲﾌﾟﾄﾒﾊﾞﾈ	1
4		140-52203	OIL NOZZLE	ｵｲﾙﾁｭｳﾆｭｳｸﾞﾁ	1
5		BT-0500300-EA	OIL TUBE	ｳﾚﾀﾝﾁｭｰﾌﾞ	1
6		B3501-210-000	OIL	ｵｲﾙｹﾞｰｼﾞ	2
7		140-52054	OIL TANK ASM.	ｵｲﾙﾀﾝｸ (ｸﾐ)	1
8		SL-4040891-SC	SCREW M4 L=8	ｻﾞｶﾞﾈｼﾞｷ ﾅﾍﾞｺﾈｼﾞ M4 L=8	3
9		140-53102	FELT	ｳｫｰﾑｷｭｳｼｭﾌｪﾙﾄ	2
10		140-53607	MAIN SHAFT BRAKE FELT	ｼｭｼﾞｸﾌﾞﾚｰｷﾌｪﾙﾄ	1
11		110-30301	CABLE HOLDER	ｺｰﾄﾞ ﾄﾒｶﾅｸﾞ	4
12		SM-6040502-TP	SCREW M4X0.7 L=5	ﾛｯｶｸｱﾅﾎﾞﾙﾄ M4 L=5	4
13		SM-6044552-TP	BOLT M4X45	ﾛｯｶｸｱﾅﾎﾞﾙﾄ	1
14		WP-0430801-SE	WASHER 4.3X9X0.8	ﾋﾗｻﾞｶﾞﾈ ﾐｶﾞｷﾏﾙ M4	2
15		140-53003	FELT	ﾃﾝﾋﾞﾝｷﾞﾔｰｷｭｳｼｭﾌｪﾙﾄ	1
16		NM-6040003-SC	NUT M4	ﾛｯｶｸﾅｯﾄ M4	1
17		140-53805	FELT	ｼｭｼﾞｸｷｭｳｼｭﾌｪﾙﾄ	1
18		140-53706	SCREW	ﾊﾟｲﾌﾟﾚﾝｸﾞﾈｼﾞ	2
19		SM-6040502-TP	SCREW M4X0.7 L=5	ﾛｯｶｸｱﾅﾎﾞﾙﾄ M4 L=5	3
20		B3538-112-000	OIL RETURN TUBE HOLDER	ｶﾝﾘｭｳ ﾊﾟｲﾌﾟｵｻｴ	3
21		SL-4040891-SC	SCREW M4 L=8	ｻﾞｶﾞﾈｼﾞｷ ﾅﾍﾞｺﾈｼﾞ M4 L=8	1
22		140-53409	FELT	ﾒｲﾝｶﾑｷｭｳｼｭﾌｪﾙﾄ	1
23		SL-4041091-SC	SCREW M4 X 10	ﾅﾍﾞｺﾈｼﾞ ｾﾑｽ M4X0.7 L=10	2
24		140-53508	MAIN CAM FELT BRACKET	ﾒｲﾝｶﾑﾌｪﾙﾄﾌﾞﾗｹｯﾄ	1
25		CS-1201010-SH	THRUST COLLAR ASM. D=12 W=10	ｽﾗｽﾄｳｹ D=12 W=10 ｸﾐ	1
26		140-53904	FELT	ﾒﾝﾌﾞﾌｪﾙﾄ	1
27		SS-8660610-TP	SCREW 1/4-40 L=6	ﾄﾒﾈｼﾞ 1/4-40 L=6	1

モータプーリ関係

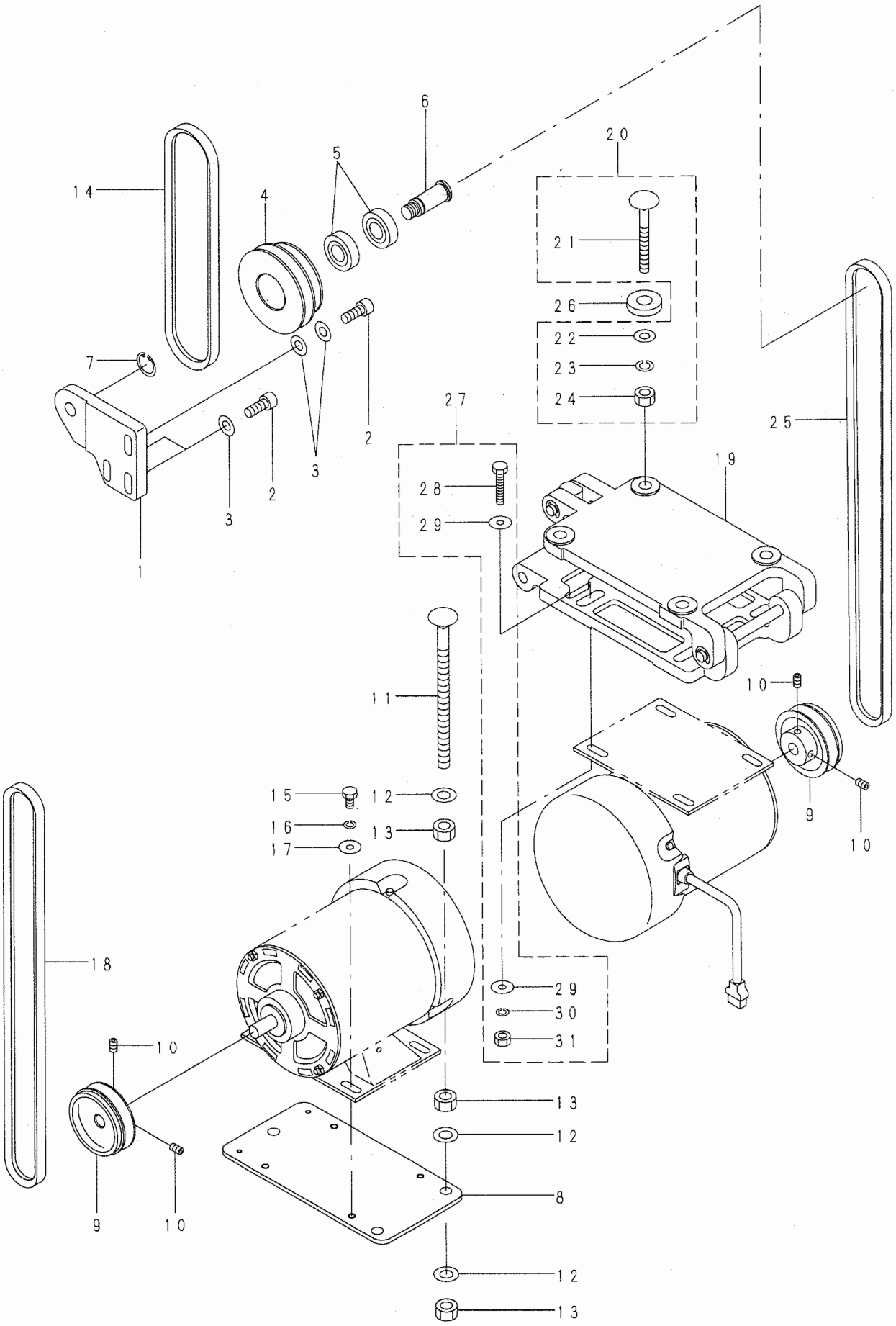

6
20
5
14
4
21
26
22
23
24
7
27
25
2
3
2
3
19
28
29
1
11
10
15
12
9
16
13
10
17
18
29
30
31
10
13
12
8
9
10
12
13

REF. NO	NOTE	PART NO.	D E S C R I P T I O N	ヒ ン メ イ	Qty
1		140-55008	SUPPORT BASE	チュウカンフ゜ーリシジ゛ダ゛イ	1
2		SM-6082002-TR	SCREW M8 L=20	ロツカクアナボ゛ルト M8 L=20	3
3		WP-0850002-SC	WASHER 8.5X18X1.6	ヒラザ゛カ゛ネ 8.5X18X1.6	4
4		140-55107	INTERMEDIATE PULLEY	チュウカンフ゜ーリ	1
5		SB-1150004-00	RADIAL BEARING	ラジ゛アルジ゛クウケ	2
6		140-55206	FULCRUM SHAFT	チュウカンフ゜ーリシテンジ゛ク	1
7		RC-0150001-KP	RETAINING RING 13.8	Cカ゛タトメワ 13.8	1
8		140-55305	INSTALLING PLATE	ハヤオクリモータトリツケイタ	1
9		140-55404	MOTOR PULLEY	モータープ゜ーリ	2
10		SM-8061002-TP	SCREW M6 L=10	トメネジ゛ M6 L=10	4
11		115-71908	BOLT D	ウケイタボ゛ルト D	3
12		WP-1102016-SC	WASHER 11X21X2	ヒラザ゛カ゛ネ 11X21X2	9
13		NS-6240630-SN	NUT 3/8-18	ロツカクナツト 3/8-18	9
14		MTJ-VM002100	V-BELT	Vベ゛ルト 21インチ	1
15		SM-9061203-SE	SCREW M6 L=12	ロツカクボ゛ルト M6 L=12	4
16		WS-0621210-KR	SPRING WASHER 6.2X11.4X1.2	ハ゛ネザ゛カ゛ネ 6.2X11.4X1.2	4
17		WP-0612056-SD	WASHER 6.1X18.5X2	ヒラザ゛カ゛ネ 6.1X18.5X2	4
18		MTJ-VM003300	V-BELT, 33 INCH	Vベ゛ルト 33インチ	1
19		B7101-761-BA0	MOTOR BASE ASM.	モータダ゛イ クミ	1
20		MTJ-MS00000S	SCREW SET	モータ トリツケボ゛ルト クミ	4
21		MTJ-MS000000	MOUNTING BOLT	モータダ゛イ トリツケボ゛ルト	(4)
22		WP-0850002-SC	WASHER 8.5X18X1.6	ヒラザ゛カ゛ネ 8.5X18X1.6	(4)
23		WS-0902010-KN	SPRING WASHER 9.0X15.0X2.0	ハ゛ネザ゛カ゛ネ 9X15X2	(4)
24		NS-6200710-SN	NUT 5/16-18	ロツカクナツト 5/16-18	(4)
25		MTJ-VM003800	V-BELT, 38 INCH	Vベ゛ルト 38インチ	1
26		MTJ-MGC00000	RUBBER CUSHION	ゴ゛ムクツシヨン	4
27		BNE-GSET0003	SCREW SET	ネジ゛セツト	4
28		SM-9063213-CN	SCREW M6 L=32	ロツカクボ゛ルト M6 L=32	(4)
29		WP-0612056-SE	WASHER 6.1X18.5X2	ヒラザ゛カ゛ネ 6.1X18.5X2	(1)
30		WS-0621210-KR	SPRING WASHER 6.2X11.4X1.2	ハ゛ネザ゛カ゛ネ 6.2X11.4X1.2	(4)
31		NM-6060001-SE	NUT M6	ロツカクナツト M6 1シユ	(4)

モータプーリカバー関係

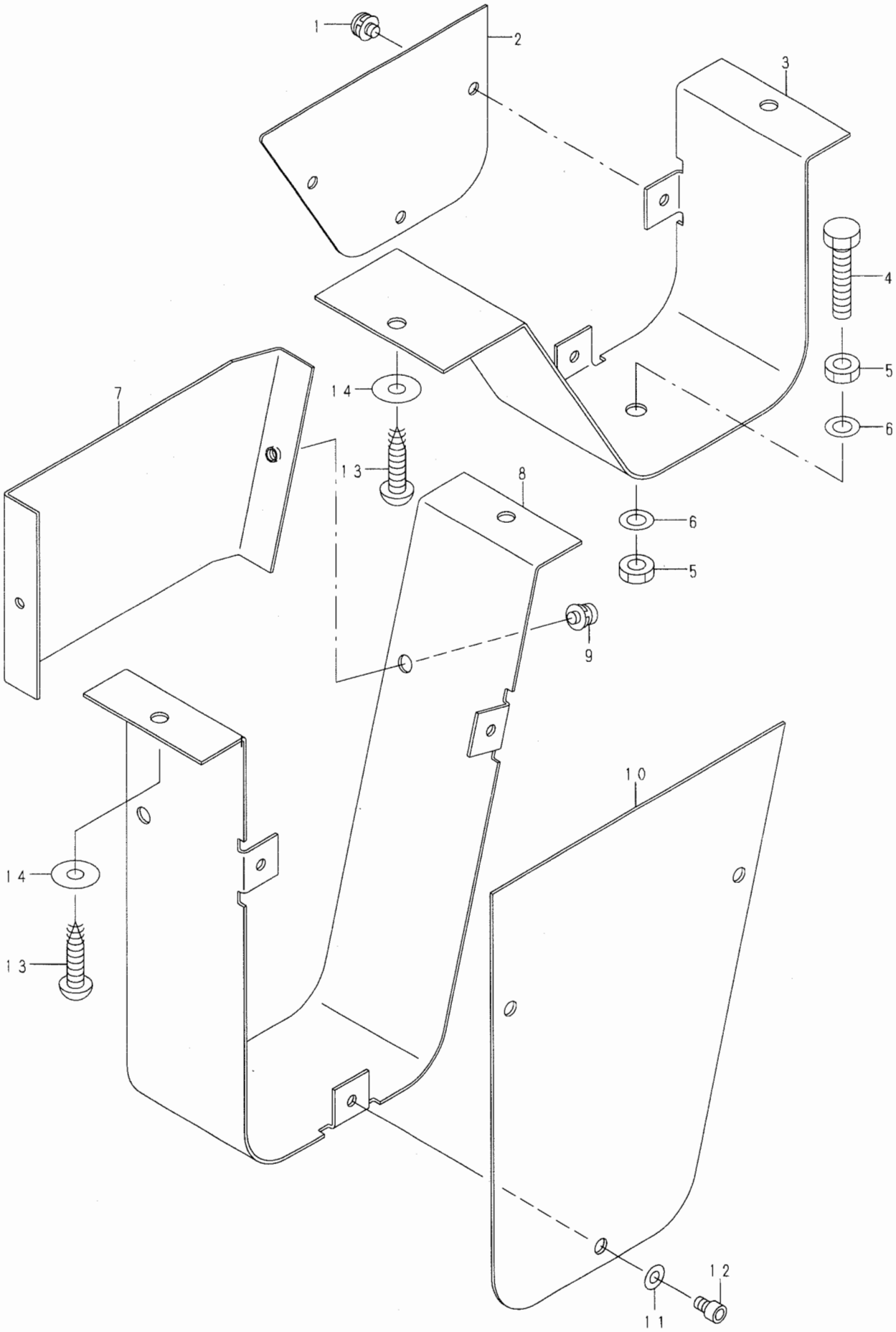

REF. NO	NOTE	PART NO.	D E S C R I P T I O N	ヒ ン メ イ	Qty
1		SL-4040691-SC	SCREW M4 L=6	ｻﾞｶﾞﾈｼﾞｷ ﾅﾍﾞｺﾈｼﾞ M4 L=6	3
2		140-55909	MOTOR PULLEY COVER B FRONT	ﾓｰﾀｰﾌﾟｰﾘｶﾊﾞｰ B ﾏｴ	1
3		140-55800	MOTOR PULLEY COVER B	ﾓｰﾀｰﾌﾟｰﾘｶﾊﾞｰ B	1
4		SM-9063003-SC	SCREW M6 L=30	ﾛｯｶｸﾎﾞﾙﾄ	1
5		NM-6060003-SC	NUT M6	ﾛｯｶｸﾅｯﾄ M6	2
6		WP-0641600-SC	WASHEW 6.4X12.5X1.6	ﾋﾗｻﾞｶﾞﾈ	2
7		140-55701	MOTOR PULLEY COVER A FRONT	ﾓｰﾀｰﾌﾟｰﾘｶﾊﾞｰ A ｳｼﾛ	1
8		140-55503	MOTOR PULLEY COVER A	ﾓｰﾀｰﾌﾟｰﾘｶﾊﾞｰ A	1
9		SL-4040691-SC	SCREW M4 L=6	ｻﾞｶﾞﾈｼﾞｷ ﾅﾍﾞｺﾈｼﾞ M4 L=6	2
10		140-55602	MOTOR PULLEY COVER A FRONT	ﾓｰﾀｰﾌﾟｰﾘｶﾊﾞｰ A ﾏｴ	1
11		WP-0430801-SC	WASHER 4.3X9X0.8	ﾋﾗｻﾞｶﾞﾈ 4.3X9X0.8	3
12		SM-6040602-TN	BOLT	ﾛｯｶｸｱﾅﾎﾞﾙﾄ	3
13		SK-3552500-SC	WOOD SCREW D=5.5 L=25	ﾏﾙﾓｸﾈｼﾞ D=5.5 L=25	4
14		WP-0561616-SC	WASHER 5.6X16X1.6	ﾋﾗｻﾞｶﾞﾈ 5.6X16X1.6	4

20.SAFETY PLATE COMPONENTS

安全プレート関係

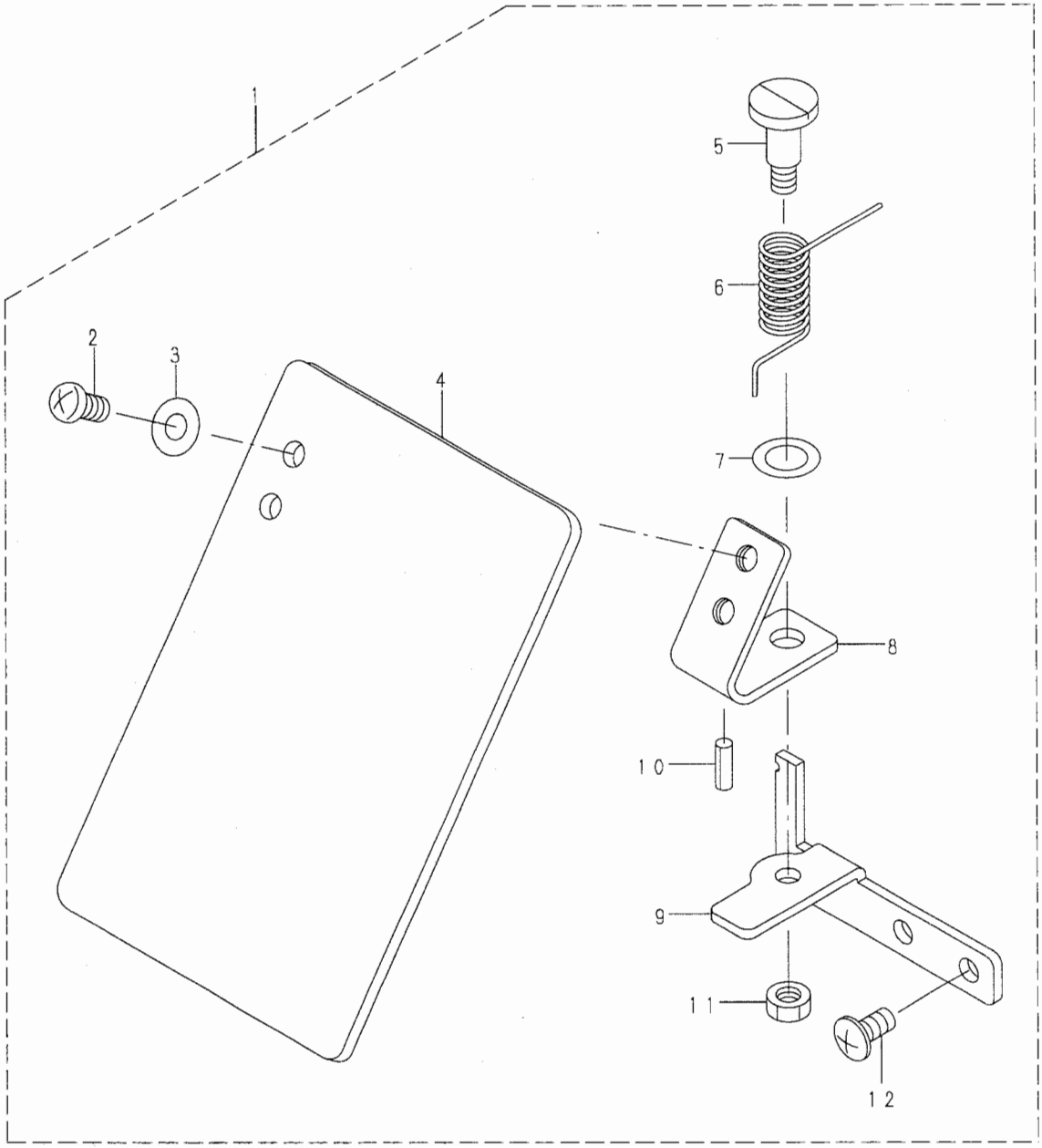

REF.NO	NOTE	PART NO.	D E S C R I P T I O N	ヒ ン メ イ	Qty
1		140-58358	SAFETY PLATE COMPLE.	ｱﾝｾﾞﾝﾌﾟﾚｰﾄ (ｹﾞｺﾞｳ)	1
2		SS-4110715-SP	SCREW 11/64-40 L=7	ﾅﾍﾞﾈｼﾞ 11/64-40 L=7	(2)
3		WP-0450801-SD	WASHER 4.5X10X0.8	ﾋﾗｻﾞｶﾞﾈ 4.5X10X0.8	(2)
4		B3120-372-000	SAFETY PLATE	ｱﾝｾﾞﾝ ﾌﾟﾚｰﾄ	(1)
5		SD-0601021-SP	HINGE SCREW D=6 H=10.2	ﾀﾞﾝﾈｼﾞ D=6 H=10.2	(1)
6		139-43204	SAFETY PLATE RETURN SPRING	ｱﾝｾﾞﾝ ﾌﾟﾚｰﾄ ﾓﾄﾞｼﾊﾞﾈ	(1)
7		WP-0740516-SP	WASHER 7.4X11.8X0.5	ﾋﾗｻﾞｶﾞﾈ 7.4X11.8X0.5	(1)
8		B3121-372-000	SAFETY PLATE INSTALLING PLATE	ｱﾝｾﾞﾝ ﾌﾟﾚｰﾄ ﾄﾘﾂｹｲﾀ	(1)
9		140-58309	SAFETY PLATE INSTALLING BASE	ｱﾝｾﾞﾝﾌﾟﾚｰﾄﾄﾘﾂｹﾀﾞｲ	(1)
10		PS-0200062-KH	SPRING PIN 2X6	ｽﾌﾟﾘﾝｸﾞﾋﾟﾝ 2X6	(1)
11		NS-6110310-SP	NUT 11/64-40	ﾛｯｶｸﾅｯﾄ 11/64-40	(1)
12		SM-0040801-SC	SCREW	ﾄﾗｽﾈｼﾞ M4 L=8	(2)

21. MOTOR & POWER SOURCE SWITCH COMPONENTS

モータ・電源スイッチ関係

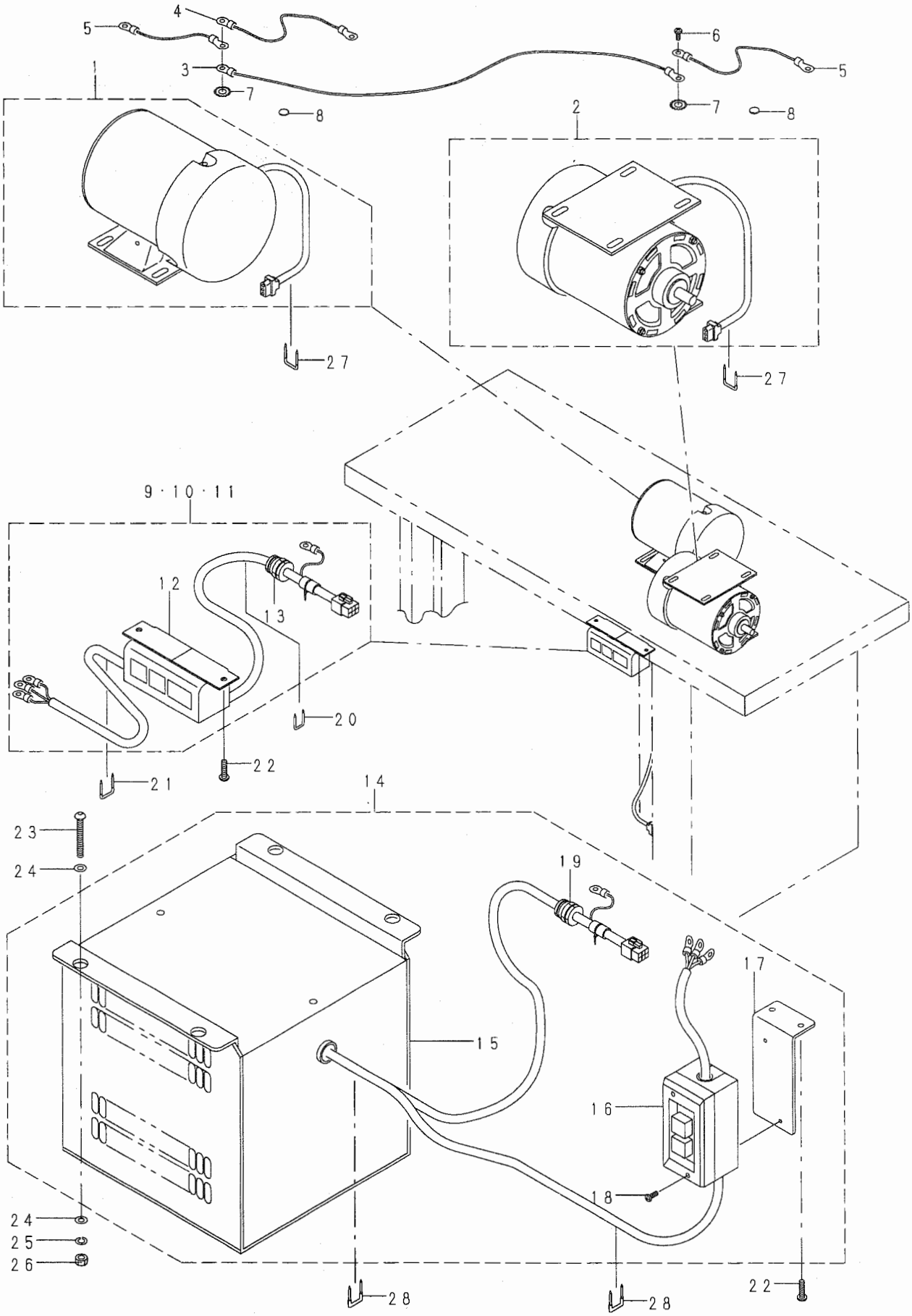

REF. NO	NOTE	PART NO.	DESCRIPTION	ヒ ン メ イ	Qty
1		140-73100	MOTOR 200VA	モータ 200VA	1
2		140-73209	MOTOR 200VB	モータ 200VB	1
3		140-75451	MOTOR FG CABLE A ASM.	モータFGケーブルA (クミ)	1
4		140-75758	MOTOR FG CABLE B ASM.	モータFGケーブルB (クミ)	1
5		140-77051	MOTOR FG CABLE C ASM	モータFGケーブルC (クミ)	2
6		SL-4041091-SC	SCREW M4 X 10	ナベコネジ セムス M4X0.7 L=10	2
7		WT-0430002-KN	WASHER M4	ハツキザカネ M4	4
8		100-04109	GROUND MARK	グラントマーク	6
9	#01	140-72854	POWER SWITCH A ASM.	デンケンスイツチA (クミ)	1
10	#02	140-72953	POWER SWITCH B ASM.	デンケンスイツチB (クミ)	1
11	#03	140-73050	POWER SWITCH C ASM.	デンケンスイツチC (クミ)	1
12		240-12106	POWER SWITCH	デンケンスイッチ	(1)
13		HX-0021000-00	CORD LOCK	コート ロツク	(1)
14	#04	140-71153	TRANSFORMER ASM.	400Vトランス (クミ)	1
15		140-71104	TRANSFORMER	400Vトランス	(1)
16		HA-0028100-00	SWITCH	カイヘイキ	(1)
17		140-71401	POWER SWITCH INSTALLING PLATE	デンケンSWトリツケイタ	(1)
18		SL-4041281-SC	SCREW M4X0.7 L=12	ナベコネジ セムス M4 L=12	(2)
19		HX-0021000-00	CORD LOCK	コート ロツク	(1)
20	#05	MA0-11532000	CORD STAPLE	コート ステツプル	1
21	#05	D8204-555-D00	DRAWER STOPPER	ヒキダシストツパー	3
22		SK-3512001-SF	WOOD SCREW	マルモクネジ D=5.1 L=20	2
23	#04	SM-3065052-TC	SCREW	マルネジ M6 L=50	4
24	#04	WP-0651001-SC	WASHER	ヒラザカネ	8
25	#04	WS-0610002-KN	SPRING WASHER 6.1X12.2X1.5	ハネザカネ M6	4
26	#04	NM-6060001-SC	NUT M6	ロツカクナツト M6 1シュ	4
27		D8204-555-D00	DRAWER STOPPER	ヒキダシストツパー	3
28	#04	D8204-555-D00	DRAWER STOPPER	ヒキダシストツパー	5

NOTE (注記)	#01....FOR φ 3 200V	φ 3 200V用
	#02....FOR φ 1 200V	φ 1 200V用
	#03....FOR φ 1 100V	φ 1 100V用
	#04....FOR φ 1 400V	φ 1 400V用
	#05....FOR φ 1 100V φ 1 200V φ 3 200V	φ 1 100V φ 1 200V φ 3 200V用

22.SYNCHRONIZER & SOLENOID COMPONENTS

シンクロナイザー・ソレノイド関係

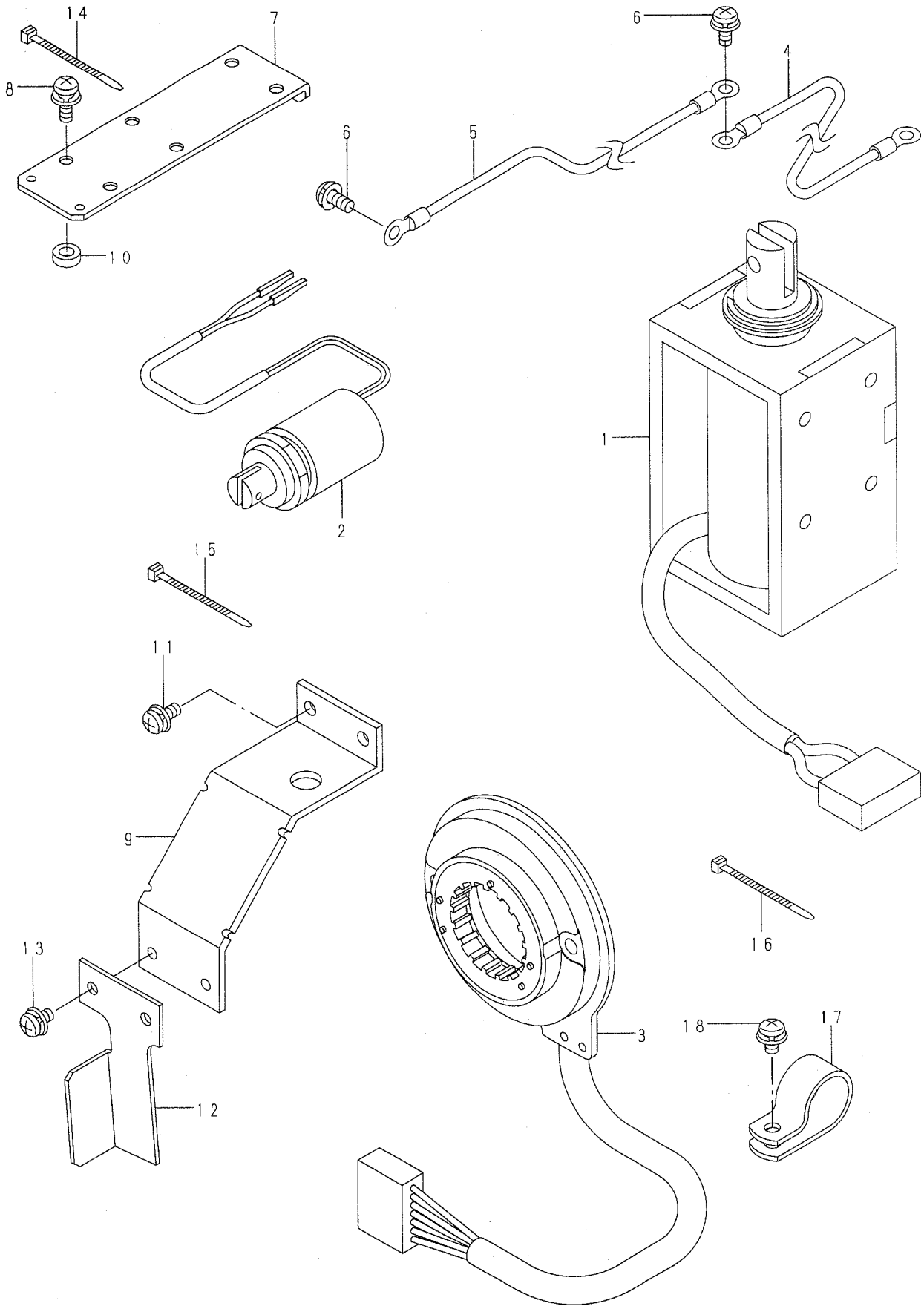

REF.NO	NOTE	PART NO.	DESCRIPTION	ヒョウメイ	Qty
1		140-75055	SOLENOID ASM.	ﾋﾟｯﾁｿﾚﾉｲﾄﾞ (ｸﾐ)	1
2		140-75154	SOLENOID ASM.	ｲﾄﾁｮｳｼｿﾚﾉｲﾄﾞ (ｸﾐ)	1
3		140-76970	POWER GENERATOR ATATER ASM.	ﾊﾂﾃﾞﾝｷｽﾃｰﾀ (ｸﾐ)	2
4		140-75550	FG CABLE A ASM.	ﾐｼﾝFGｹｰﾌﾞﾙA (ｸﾐ)	1
5		140-75659	FG CABLE B ASM.	ﾐｼﾝFGｹｰﾌﾞﾙB (ｸﾐ)	1
6		SL-4041091-SC	SCREW M4 X 10	ﾅﾍﾞｺﾈｼﾞ ｾﾑｽ M4X0.7 L=10	2
7		140-72102	CORD FIXING PLATE A	ｺｰﾄﾞﾄﾒｲﾀ (A)	1
8		SL-4041291-SC	SCREW M4 L=12	ﾅﾍﾞｺﾈｼﾞ ｾﾑｽ M4 L=12	2
9		140-72201	CORD FIXING PLATE B	ｺｰﾄﾞﾄﾒｲﾀ (B)	1
10		B3108-850-000	NEEDLE GUIDE SPACER	ｲﾄｱﾝﾅｲ ｽﾍﾟｰｻ	2
11		SL-4041091-SC	SCREW M4 X 10	ﾅﾍﾞｺﾈｼﾞ ｾﾑｽ M4X0.7 L=10	2
12		140-72300	CORD FIXING PLATE C	ｺｰﾄﾞﾄﾒｲﾀ (C)	1
13		SL-4040891-SC	SCREW M4 L=8	ｻﾞｶﾞﾈｼﾞｷ ﾅﾍﾞｺﾈｼﾞ M4 L=8	2
14		EA-9500B00-00	CABLE BAND 70	ｹﾞｿﾞｸﾊﾞﾝﾄﾞ 70	15
15		EA-9500B02-00	CABLE BAND 150	ｹﾞｿﾞｸﾊﾞﾝﾄﾞ 150	10
16		HX-0006500-0A	CABLE BAND 200	ｿｸｾﾝﾊﾞﾝﾄﾞ	1
17		HX-0015000-0L	CABLE CLIP	ｹｰﾌﾞﾙｸﾘｯﾌﾟ	4
18		SL-4040891-SC	SCREW M4 L=8	ｻﾞｶﾞﾈｼﾞｷ ﾅﾍﾞｺﾈｼﾞ M4 L=8	3

センサー・ミシンパネル関係

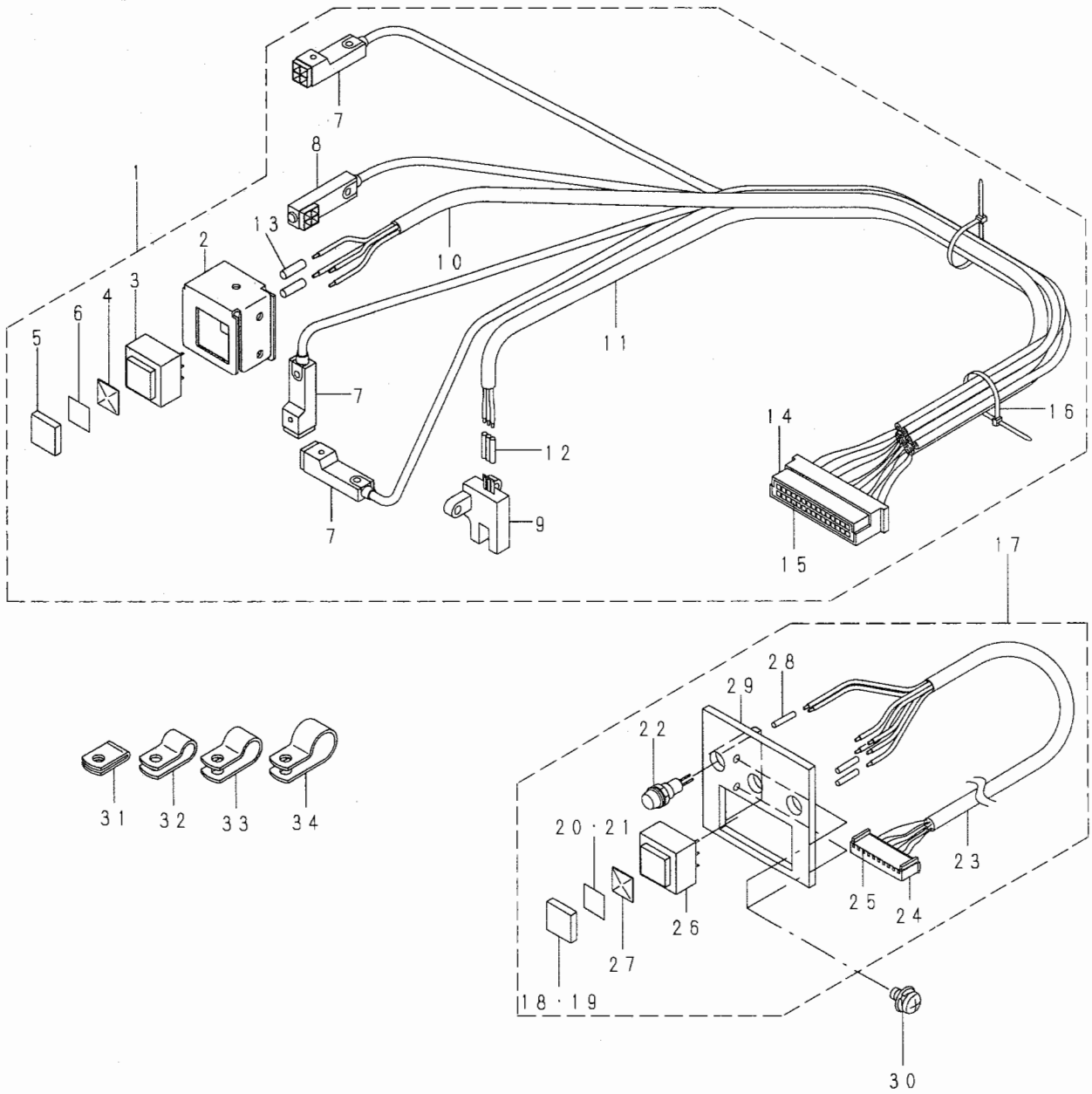

REF. NO	NOTE	PART NO.	D E S C R I P T I O N	ヒ ン メ イ	Qty
1		140-75352	SENSOR ASM.	センサ (クミ)	1
2		140-72409	START SWITCH INSTALLING PLATE	スタートスイッチトリツケイタ	(1)
3		HA-0033500-0A	SWITCH	ショウコウSW	(1)
4		HA-0033500-40	SWITCH PARTS	スイッチパーツ	(1)
5		HA-0033500-3B	SWITCH BUTTON	スイッチ ボタン	(1)
6		140-74009	LIGHTING SHEET C	ショウコウシート C	(1)
7		HD-0006600-00	PROXIMITY SENSOR	キンセツ センサー	(3)
8		HD-0003800-00	SENSOR	キンセツ センサ	(1)
9		HD-0003600-0A	SENSOR	フォトセンサ	(1)
10		HW-0008400-40	4-CORE CABTYRE CORD	ケーブル 4シン	(2.2)
11		HW-0007700-30	CORD	キャブタイヤ コード 3シン	(2.2)
12		E8760-452-B00	TUBE	スミチューブ	(0.1)
13		E8760-452-D00	TUBE 0.015M	スミチューブ	(0.1)
14		HK-0290103-00	CONNECTOR	コネクタ 30P	(1)
15		HK-0290400-00	PIN TERMINAL	ピンコンタクト	(19)
16		EA-9500B01-00	CABLE BAND	ソクセンバンド	(2)
17		140-75253	PANEL ASM.	ミシンパネル (クミ)	1
18		HA-0033500-30	SWITCH PARTS	スイッチパーツ	(1)
19		HA-0033500-3A	SWITCH PARTS	スイッチパーツ	(1)
20		140-73803	LIGHTING SHEET A	ショウコウシート A	(1)
21		140-73902	LIGHTING SHEET B	ショウコウシート B	(1)
22		HG-0022700-0A	LED RED	LED アカ	(3)
23		HW-5002900-00	CABTYRE CORD	ビニール キャブタイヤコード	(2.2)
24		HK-0165101-00	HOUSING	ハウジング 10P	(1)
25		HK-0165400-00	RECEPTABLE CONTACT	リセプタクル コンタクト	(7)
26		HA-0033500-00	PUSH SW	プッシュSW	(2)
27		HA-0033500-40	SWITCH PARTS	スイッチパーツ	(2)
28		E8760-452-D00	TUBE 0.015M	スミチューブ	(0.2)
29		140-72003	PANEL	ミシンパネル	(1)
30		SL-4040891-SC	SCREW M4 L=8	サカネヅキ ナベコネジ M4 L=8	2
31		HX-0015000-00	CLIP	ケーブル クリツプ	3
32		HX-0015000-0C	CABLE CLIP	ソクセンパーツ	2
33		HX-0015000-0D	CABLE CLIP	ケーブル クリツプ	1
34		HX-0015000-0F	CABLE CLIP	ケーブルクリツプ	1

糸立装置関係

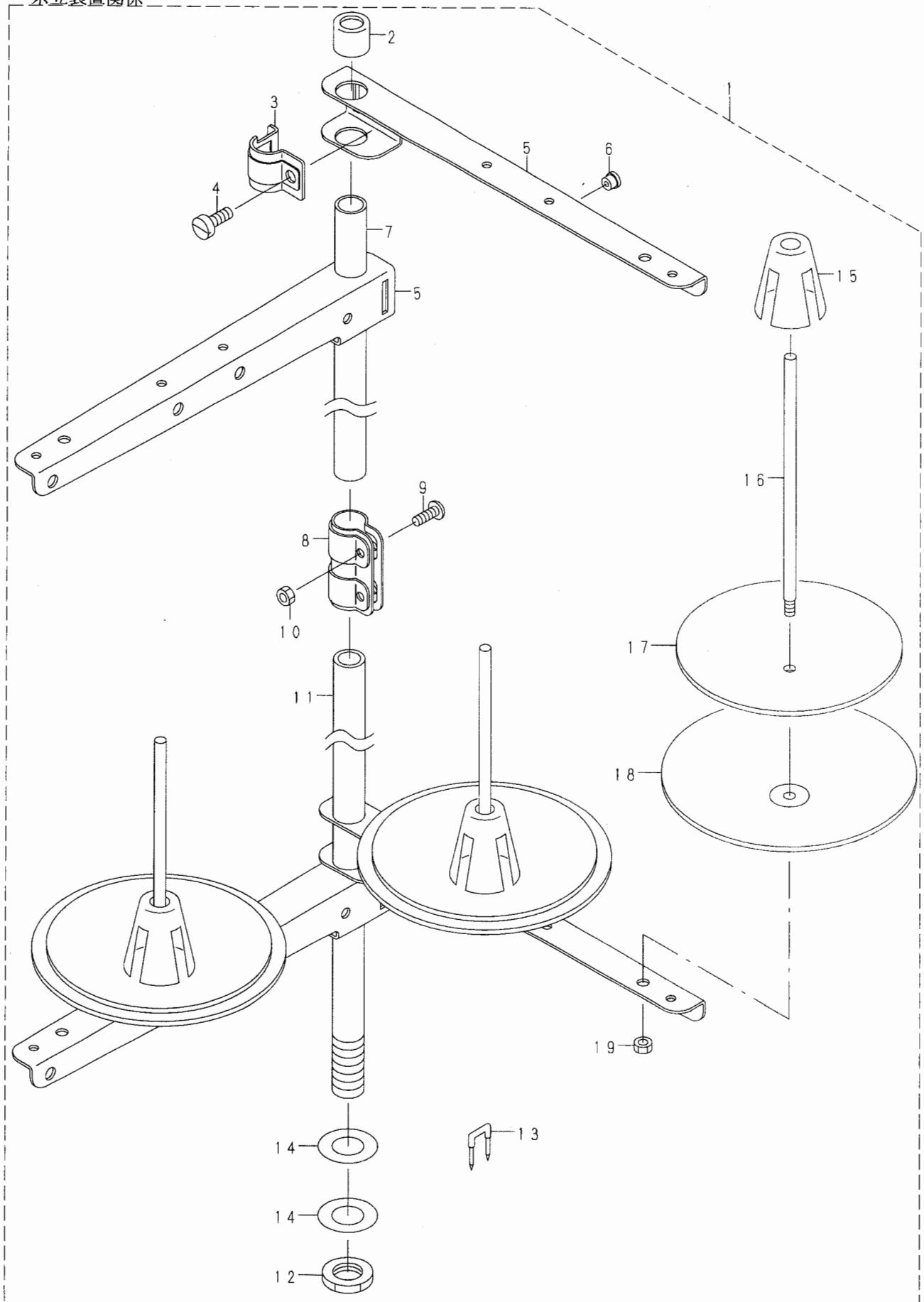

REF. NO	NOTE	PART NO.	D E S C R I P T I O N	ヒ ン メ イ	Qty
1		138-49260	THREAD STAND ASM.	イトタテソウチ(クミ)	1
2		B3311-704-000	SPOOL REST ROD CAP	イトタテホ゛-キャツフ゜	(1)
3		B3318-704-L00-A	THREAD GUIDE ARM JOINT	イトタテウテ゛ シメカナグ゛	(4)
4		SM-6061610-SC	SCREW M6 L=16	ヒラコネジ゛ M6 L=15	(4)
5		119-69409	THREAD GUIDE ARM B	イトタテウテ゛ B	(4)
6		B3319-704-L00	THREAD GUIDE	イトミチ	(3)
7		111-85204	SPOOL REST ROD,UPPER	イトタテホ゛ウ ウエ	(1)
8		B3305-704-000-A	SPOOL REST ROD JOINT	イトタテホ゛-ツキ゛テ	(1)
9		SM-4051405-SE	SCREW M5 L=14	ナヘ゛コネジ゛ M5 L=14	(2)
10		NM-6050001-SE	NUT M5	ロツカクナツト M5	(2)
11		111-85105	SPOOL REST ROD,LOWER	イトタテホ゛ウ シタ	(1)
12		B3317-704-000	NUT	イトタテホ゛- トメナツト	(1)
13		MA0-11532000	CORD STAPLE	コ-ト゛ ステツフ゜ル	(3)
14		WP-1612616-SE	WASHER 16X30X2.6	ヒラサ゛カ゛ネ	(2)
15		111-85501	SPOOL RETAINER	イトマキ フレト゛メ	(3)
16		B3320-704-L00-A	SPOOL PIN	イトマキウケホ゛ウ	(3)
17		B3311-012-000	SPOOL REST CUSHION	イトマキウケサ゛	(3)
18		119-66504	SPOOL REST	イトマキウケサ゛ラ	(3)
19		NM-6050001-SE	NUT M5	ロツカクナツト M5	(3)

25. TABLE COMPONENTS

脚卓関係

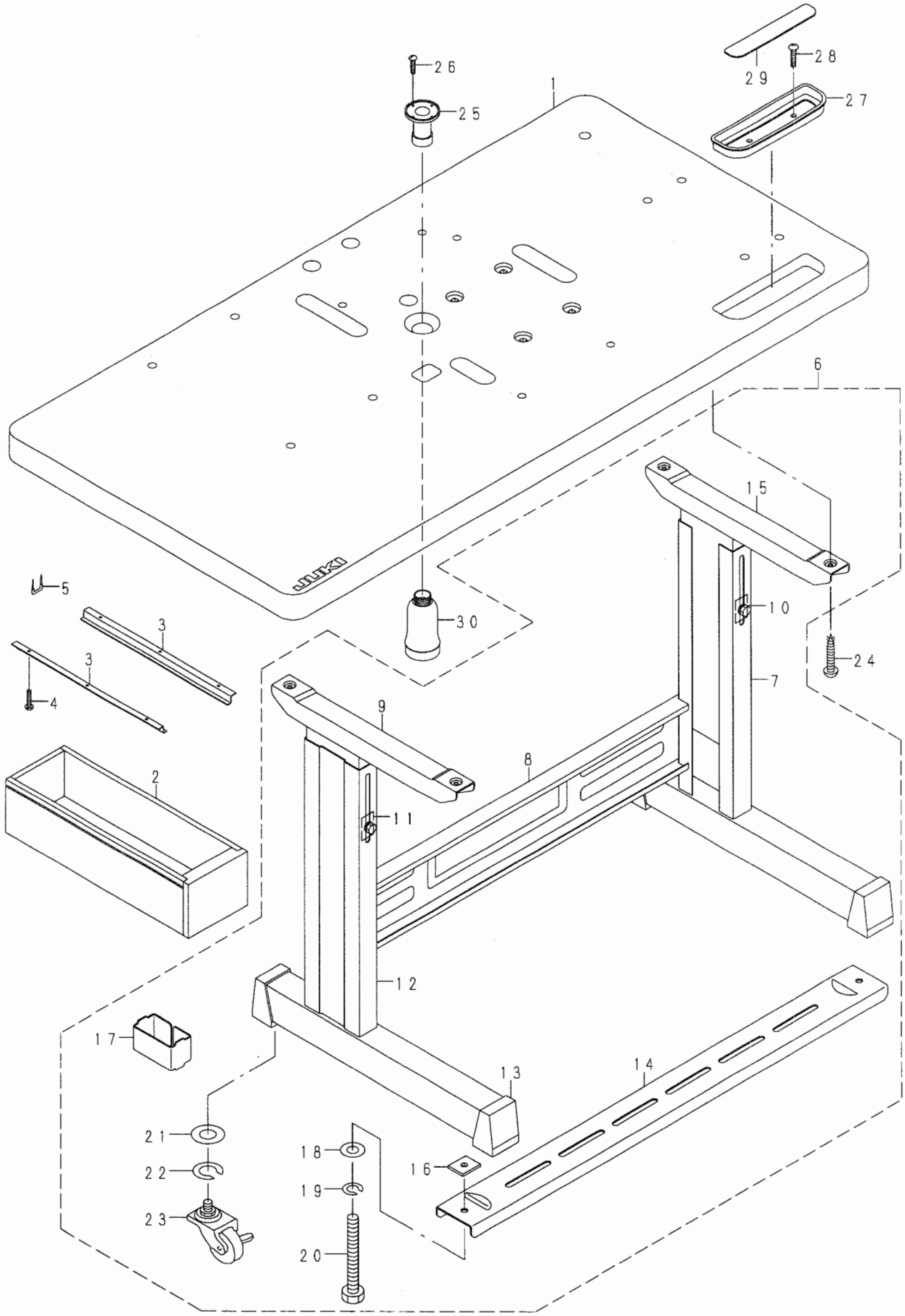

REF. NO	NOTE	PART NO.	DESCRIPTION	ヒョウメイ	Qty
1		140-56006	TABLE	テーブル	1
2		118-49502	DRAWER	ヒキダシ	1
3		B8204-012-000	DRAWER SUPPORT	ヒキダシ ササエ	2
4		SK-3311600-SC	WOOD SCREW D=3.1 L=16	マルモクネジ D=3.1 L=16	6
5		D8204-555-D00	DRAWER STOPPER	ヒキダシストツパー	1
6		111-59357	T-STAND ASM.	Tキャク(クミ)	1
7		111-57955	STUD ASM., RIGHT	シチュウケツゴウ(ミギ)	(1)
8		111-58300	STAND SIDE SUPPORT	ヨコ シチュウ	(1)
9		111-57757	STAND UPPER, LEFT	ウワキャクケツゴウ(ヒダリ)	(1)
10		SL-9082091-SE	WASHER HEXAGONAL BOLT	ザガネツキロツカクボルト	(10)
11		111-58508	PLATE	ウワキャク トメイタ	(2)
12		111-58052	STRUT JUNCTION (LEFT)	シチュウケツゴウ(ヒダリ)	(1)
13		111-58607	RUBBER CAP	キャク トダイ キャップ	(4)
14		111-58409	STAND SIDE SUPPORT	シタ シチュウ	(1)
15		111-57658	STAND UPPER, RIGHT	ウワキャクケツゴウ(ミギ)	(1)
16		170-07402	NUT	44カクナツト	(2)
17		111-59506	STRUT AUXILIARY PLATE	シタシチュウ ホジョイタ	(2)
18		WP-0871602-SE	WASHER 8.7X18X1.6	ヒラザガネ 8.7X18X1.6	(2)
19		WS-0861410-KR	SPRING WASHER 8.6X15X1.4	ハネザガネ 8.6X15X1.4	(2)
20		SM-9086523-SE	HEXAGONAL BOLT	ロッカクボルト	(2)
21		WP-1302501-SE	WASHER M12	ヒラザガネ	(4)
22		WS-1253010-KN	SPRING WASHER 12.5X21.5X3	ハネザガネ 12.5X21.5X3	(4)
23		111-59407	CASTER	キャスター	(4)
24		SK-3513200-SC	WOOD SCREW D=5.1 L=32	マルモクネジ D=5.1 L=32	4
25		B8202-205-000	OIL MANAGEMENT	アブラヌキ	1
26		SK-3311600-SC	WOOD SCREW D=3.1 L=16	マルモクネジ D=3.1 L=16	4
27		111-56007	CASE	コモノイレ	1
28		SK-3382001-SC	WOOD SCREW D=3.8 L=20	マルモクネジ D=3.8 L=20	2
29		111-55801	CASE MAGNET	コモノイレ マグネット	1
30		B9121-012-000	OIL CAN	アブラビン	1

26. TRANSMISSION BOX COMPONENTS

電装ＢＯＸ関係

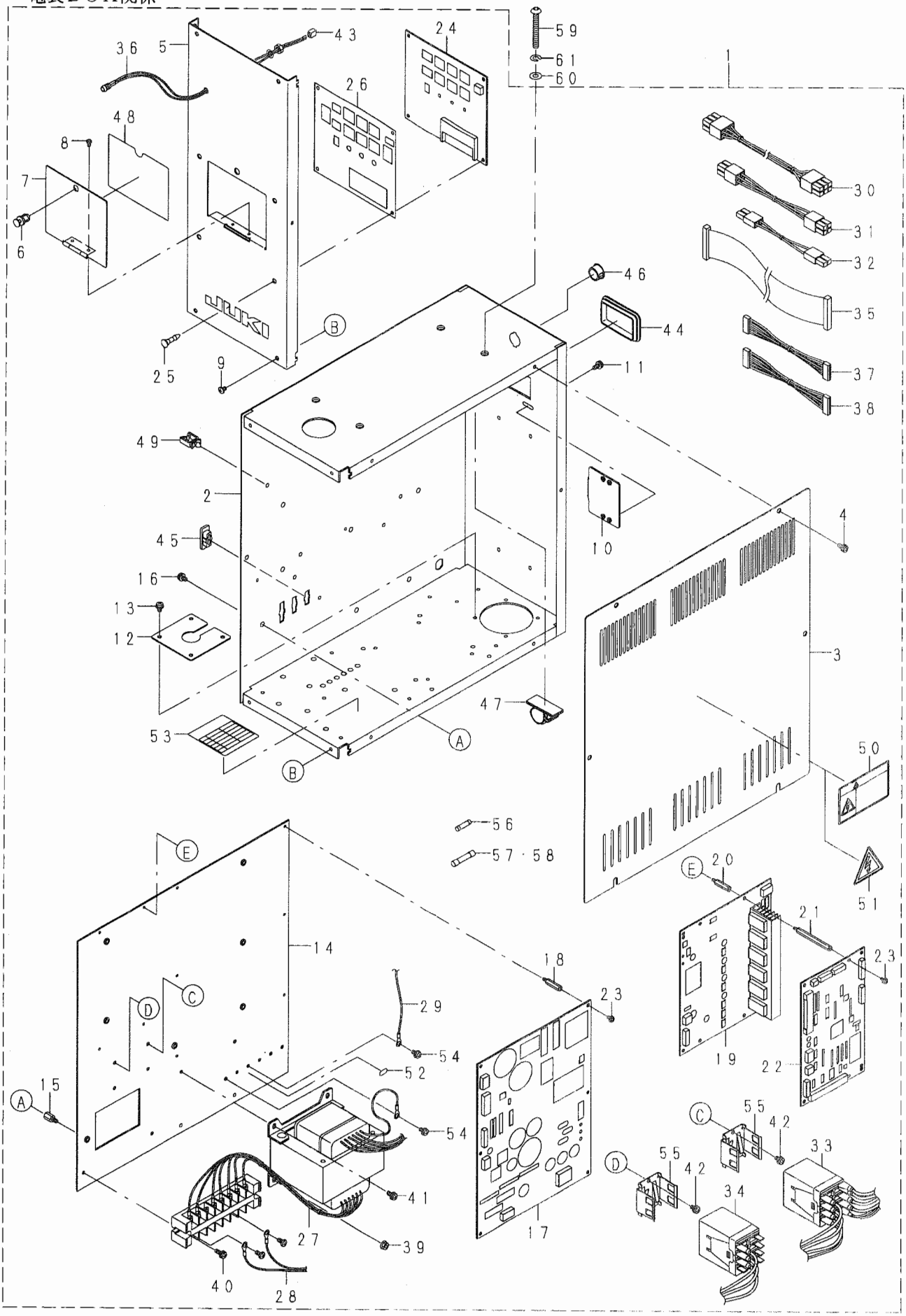

REF. NO	NOTE	PART NO.	DESCRIPTION	ヒ ン メ イ	Qty
1		140-73357	CONTROL BOX A ASM.	ﾃﾞﾝｿｳBOX A(ｸﾐ)	1
2		140-73308	CONTROL BOX A	ﾃﾞﾝｿｳBOX A	(1)
3		G1003-192-0A0	CONTROL BOX COVER ASM.	ﾃﾞﾝｿｳﾎﾞｯｸｽﾌﾀｸﾐ	(1)
4		SL-4041091-SC	SCREW M4 X 10	ﾅﾍﾞｺﾈｼﾞ ｾﾑｽ M4X0.7 L=10	(6)
5		140-73407	CONTROL PANEL	ﾃﾞﾝｿｳﾊﾟﾈﾙ	(1)
6		M8808-301-000	NYLATCH	ﾌﾀ ﾄﾒ ﾅｲ	(1)
7		178-45108	PANEL COVER	ﾊﾟﾈﾙﾌﾀ	(1)
8		SL-4030691-SC	SCREW M3X6	ﾅﾍﾞｺﾈｼﾞ ｾﾑｽ M3X0.5 L=6	(2)
9		SM-0040601-SC	SCREW M4X0.7 L=6	ﾄﾗｽｺﾈｼﾞ M4X0.7 L=6	(7)
10		140-73506	CORD STOP PLATE	ｺｰﾄﾞﾄﾒｲﾀ	(1)
11		SL-4041091-SC	SCREW M4 X 10	ﾅﾍﾞｺﾈｼﾞ ｾﾑｽ M4X0.7 L=10	(2)
12		140-73605	STOP PLATE	ﾃﾞﾝｹﾞﾝｺｰﾄﾞﾄﾒｲﾀ	(1)
13		SL-4040891-SC	SCREW M4 L=8	ｻﾞｶﾞﾈｼﾂｷ ﾅﾍﾞｺﾈｼﾞ M4 L=8	(4)
14		140-73704	FITTING PLATE	ｷﾊﾞﾝﾄﾘﾂｹｲﾀ A	(1)
15		HX-0033900-00	STUD	ｷﾊﾞﾝﾊﾟｰﾂ	(9)
16		SL-4040891-SC	SCREW M4 L=8	ｻﾞｶﾞﾈｼﾂｷ ﾅﾍﾞｺﾈｼﾞ M4 L=8	(9)
17		M8604-801-0A0	PEWER BASE ASM.	ﾊﾟﾜｰｷﾊﾞﾝ (ｸﾐ)	(1)
18		HX-0035400-00	STUD	ｷﾊﾞﾝﾊﾟｰﾂ	(6)
19		M8602-801-0A0	DRIVE BASE ASM.	ﾄﾞﾗｲﾌﾞｷﾊﾞﾝ (ｸﾐ)	(1)
20		HX-0035400-00	STUD	ｷﾊﾞﾝﾊﾟｰﾂ	(4)
21		HX-0035400-0E	STUD	ｷﾊﾞﾝﾊﾟｰﾂ	(4)
22		M8601-801-0B0	CAP BASE ROM A ASM.	CPUｷﾊﾞﾝROM A (ｸﾐ)	(1)
23		SL-4030681-SC	SCREW M3 L=6	ｻﾞｶﾞﾈｼﾂｷ ﾅﾍﾞｺﾈｼﾞ M3 L=6	(10)
24		M8603-801-0A0	PANEL BASE ASM.	ﾊﾟﾈﾙｷﾊﾞﾝ (ｸﾐ)	(1)
25		HX-0040800-00	BOARD PARTS	ｷﾊﾞﾝﾊﾟｰﾂ	(4)
26		140-70700	PANEL SEAT	ﾊﾟﾈﾙｼｰﾄ	(1)
27		140-70650	CONTROL TRANSFORMER A ASM.	ﾃﾞﾝｹﾞﾝﾄﾗﾝｽ A (ｸﾐ)	(1)
28		140-75857	CABLE ASM.	ﾄﾗﾝｽﾀｯﾌﾟｹｰﾌﾞﾙ (ｸﾐ)	(1)
29		140-75956	CABLE ASM.	ﾊﾟﾜｰFGｹｰﾌﾞﾙ (ｸﾐ)	(1)
30		140-76053	CABLE ASM.	CPUﾃﾞﾝｹﾞﾝｹｰﾌﾞﾙ (ｸﾐ)	(1)
31		140-76152	CABLE ASM.	ﾄﾞﾗｲﾌﾞﾃﾞﾝｹﾞﾝｹｰﾌﾞﾙ (ｸﾐ)	(1)
32		140-76251	CABLE ASM.	HVｹｰﾌﾞﾙ (ｸﾐ)	(1)
33		140-76350	CABLE 1 ASM.	ﾓｰﾀｷﾘｶｴｹｰﾌﾞﾙ1 (ｸﾐ)	(1)
34		140-76459	CABLE 2 ASM.	ﾓｰﾀｷﾘｶｴｹｰﾌﾞﾙ2 (ｸﾐ)	(1)
35		140-76558	CABLE ASM.	ﾊﾟﾈﾙI/Fｹｰﾌﾞﾙ (ｸﾐ)	(1)
36		140-76657	CABLE ASM.	ﾃﾞﾝｹﾞﾝLEDｹｰﾌﾞﾙ (ｸﾐ)	(1)
37		140-76756	CABLE ASM.	PWMｹｰﾌﾞﾙ (ｸﾐ)	(1)
38		140-76855	CABLE ASM.	SOLｼﾝｺﾞｳｹｰﾌﾞﾙ (ｸﾐ)	(1)
39		NM-3040520-SE	NUT WITH FLANGE	ﾌﾗﾝｼﾞﾂｷﾅｯﾄ	(2)
40		SL-4041281-SC	SCREW M4X0.7 L=12	ﾅﾍﾞｺﾈｼﾞ ｾﾑｽ M4 L=12	(2)
41		SL-4041091-SC	SCREW M4 X 10	ﾅﾍﾞｺﾈｼﾞ ｾﾑｽ M4X0.7 L=10	(2)
42		SL-4040891-SC	SCREW M4 L=8	ｻﾞｶﾞﾈｼﾂｷ ﾅﾍﾞｺﾈｼﾞ M4 L=8	(4)
43		HK-0165100-20	HOUSING 2 P	ｺﾈｸﾀ ﾊｳｼﾞﾝｸﾞ ｽﾄﾚｰﾄ	(1)
44		HX-0040700-00	BUSH	ﾌﾞｯｼｭ	(1)
45		M3011-110-000	PLUG	ｺﾈｸﾀﾒｸﾗﾌﾞﾀ	(1)
46		HX-0032600-0C	DOME PLUG	ﾌﾞｯｼｭ	(1)
47		HX-0023500-0E	CKS CLAMP	ｿｸｾﾝﾊﾟｰﾂ	(2)
48		140-74306	SEAL	ｷﾉｳｾﾂﾒｲｼｰﾙ	(1)
49		HX-0022200-0A	CABLE CLAMP	ｿｸｾﾝ ｸﾗﾝﾌﾟ	(2)
50	#01	CM-3001001-02	DANGER LABEL (LARGE)	ﾃﾞﾝｹﾞｷｹﾝﾗﾍﾞﾙ(ﾀﾞｲ)	(1)
51	#02	CM-3001000-04	SEAL	ｷｹﾝﾃﾞﾝｱﾂｹｲｺｸｼｰﾙ(50)	(1)
52		CM-2001000-01	PE MARK LABEL	PEﾏｰｸｼｰﾙ	(1)
53		140-74405	SEAL A	ﾄﾗﾝｽﾀｯﾌﾟｼｰﾙ A	(1)
54		SL-4040891-SC	SCREW M4 L=8	ｻﾞｶﾞﾈｼﾂｷ ﾅﾍﾞｺﾈｼﾞ M4 L=8	(6)
55		HB-0008100-10	RELAY SOCKET	ｶﾝﾚﾝﾊﾟｰﾂ	(2)
56		HF-0037030-PA	FUSE (BELL) 5TT3	ﾋｭｰｽﾞ 3A	(1)
57		HF-0015050-P0	FUSE	ﾋｭｰｽﾞ 5A	(1)
58		HF-0015010-00	FUSE	ﾋｭｰｽﾞ	(2)
59		SM-3065052-TC	SCREW	ﾏﾙﾈｼﾞ M6 L=50	4
60		WP-0651001-SC	WASHER	ﾋﾗｻﾞｶﾞﾈ	4
61		WS-0610002-KN	SPRING WASHER 6.1X12.2X1.5	ﾊﾞﾈｻﾞｶﾞﾈ M6	4

NOTE (注記)

#01....FOR DOMESTIC USE　国内用
#02....FOR EXPORT　一般輸出用

27. FOOT PEDAL COMPONENTS (OPTION)

足踏みペダル関係（オプション）

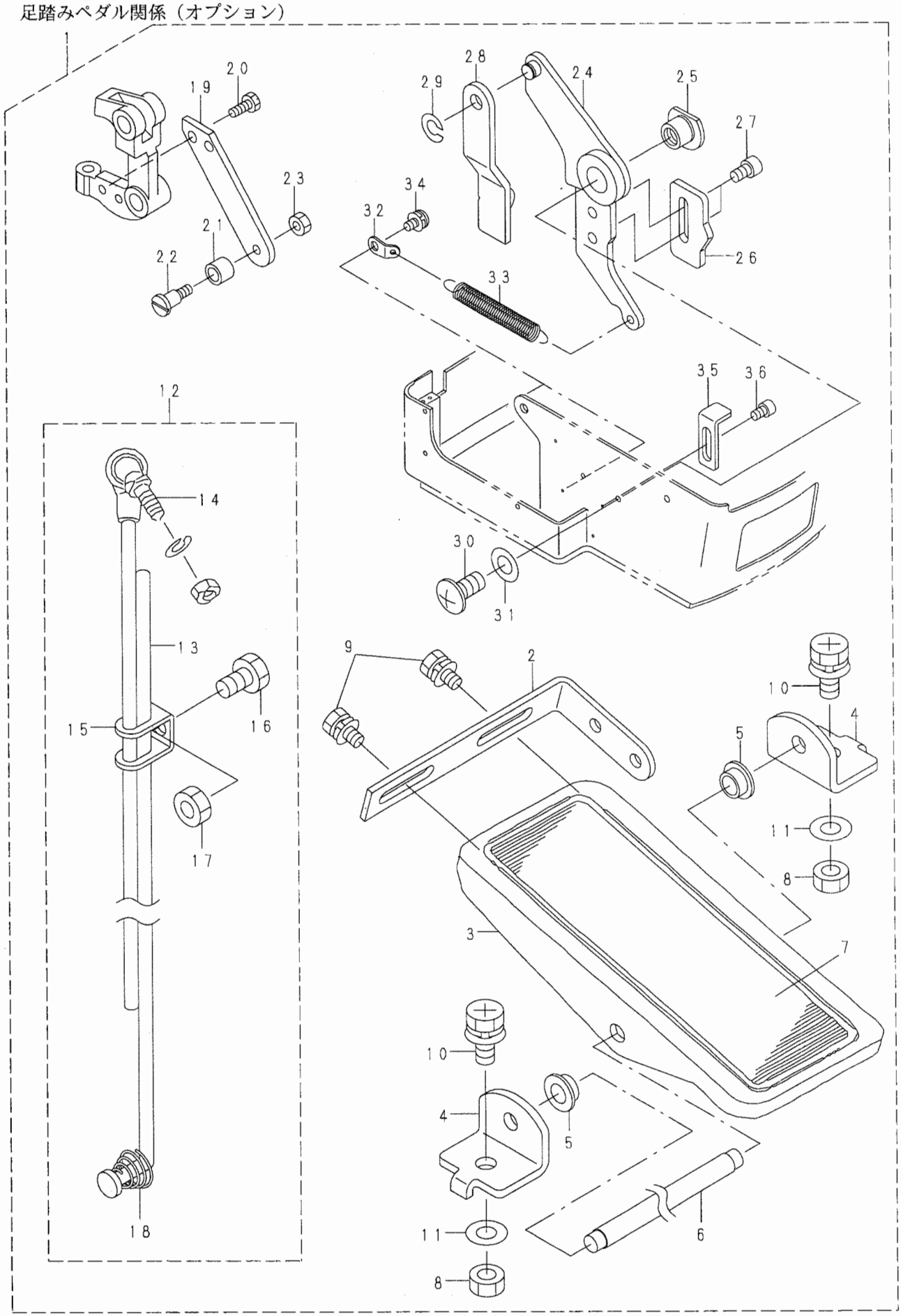

REF. NO	NOTE	PART NO.	D E S C R I P T I O N	ヒ ン メ イ	Qty
1		140-18857	PEDAL ASM.	ﾍﾟﾀﾞﾙｹﾂｺﾞｳ A	1
2		GPF-06080000	PEDAL ADJUSTING PLATE	ﾌﾐｲﾀ ﾁｮｳｾﾂﾊﾞﾝ	(1)
3		GPF-06060000	PEDAL	ﾍﾟﾀﾞﾙ	(1)
4		111-59001	PEDAL SHAFT BRACKET	ﾌﾐｲﾀ ｼﾞｸｳｹ	(2)
5		D8113-555-B00	PEDAL BUSHING	ﾌﾐｲﾀ ﾌﾞｯｼｭ	(2)
6		B8153-771-000	PEDAL CONNECTING ROD	ﾍﾟﾀﾞﾙｼﾞｸ	(1)
7		GPF-06070000	PEDAL MAT	ﾍﾟﾀﾞﾙ ﾏｯﾄ	(1)
8		NM-6080001-SE	NUT M8	ﾛｯｶｸﾅｯﾄ M8 1ｼｭ	(2)
9		SL-9061291-SE	WASHER HEXAGONAL BOLT M6 L=12	ｻﾞｶﾞﾈｯｷﾛｯｶｸﾎﾞﾙﾄ	(2)
10		SL-9082091-SE	WASHER HEXAGONAL BOLT	ｻﾞｶﾞﾈｯｷﾛｯｶｸﾎﾞﾙﾄ	(2)
11		WP-0871602-SE	WASHER 8.7X18X1.6	ﾋﾗｻﾞｶﾞﾈ 8.7X18X1.6	(2)
12		140-56253	CONNECTING ROD ASM.	ﾚﾝｹﾂﾎﾞｳ (ｸﾐ)	(1)
13		140-56204	LOWER CONNECTING ROD	ｼﾀﾚﾝｹﾂﾎﾞｳ	(1)
14		161-88153	CONNECTING ROD ASM. A	ﾚﾝｹﾂﾎﾞｳAｸﾐ	(1)
15		B7114-012-000	MOTOR CONNECTING ROD	ﾚﾝｹﾂﾎﾞ - ﾂｷﾞﾃ	(1)
16		SM-9081423-SE	SCREW M8 L=14	ﾛｯｶｸﾎﾞﾙﾄ M8 L=14	(1)
17		NM-6080721-SE	NUT M8	ﾛｯｶｸﾅｯﾄ M8	(1)
18		D7133-555-B00	CONNECTING ROD SPRING	ｼﾀﾚﾝｹﾂﾎﾞ - ﾊﾞﾈ	(1)
19		140-18808	PRESSER FOOT DRIVING PLATE	ｵｻｴｸﾄﾞｳﾚﾝｹﾂｲﾀ	(1)
20		SM-9041050-SC	SCREW M4X0.7 L=10	ﾛｯｶｸﾎﾞﾙﾄ M4X0.7 L=10	(2)
21		135-22909	SLIDE ROLLER	ｷﾄﾞｰﾚﾊﾞｰｺﾛ	(1)
22		SD-0640801-TP	HINGE SCREW D= 6.35 H= 8.0	ﾀﾞﾝﾈｼﾞ D=6.35 H=8	(1)
23		NS-6110420-SP	NUT 11/64-40	ﾛｯｶｸﾅｯﾄ 11/64-40	(1)
24		140-19152	PRESSER FOOT DRIVING BASE ASM.	ｵｻｴｸﾄﾞｳﾀﾞｲ (ｸﾐ)	(1)
25		140-19400	DRIVING BASE STOPPER	ｵｻｴｸﾄﾞｳﾀﾞｲﾄﾞﾒ	(1)
26		140-19509	ADJUSTING PLATE	ｵｻｴｸﾄﾞｳﾁｮｳｾﾂｲﾀ	(1)
27		SM-6050802-TP	SCREW M5X0.8 L=8	ﾛｯｶｸｱﾅﾎﾞﾙﾄ M5X0.7 L=8	(2)
28		140-19608	PEDAL CONNECTING PLATE	ﾍﾟﾀﾞﾙﾚﾝｹﾂｲﾀ	(1)
29		RC-0650811-KP	RETAINING RING	Cｶﾞﾀﾄﾒﾜ	(1)
30		SM-0081601-SC	SCREW	ﾄﾗｽﾈｼﾞ M8 L=16	(1)
31		WP-0901603-SB	WASHER	ﾋﾗｻﾞｶﾞﾈ 8.5X16X1.2	(1)
32		140-16901	SPRING HOOK	ｸﾄﾞｳｳﾃﾞﾓﾄﾞｼﾊﾞﾈｶｹ	(1)
33		140-18907	RETURN SPRING	ｵｻｴｸﾄﾞｳﾀﾞｲﾓﾄﾞｼﾊﾞﾈ	(1)
34		SL-4040891-SC	SCREW M4 L=8	ｻﾞｶﾞﾈｯｷ ﾅﾍﾞｺﾈｼﾞ M4 L=8	(1)
35		GBC-02420000	M.SW 2 OPERATING PLATE	MSW4 ｻﾄﾞｰｲﾀ	(1)
36		SM-6040602-TP	SCREW M4 L=6	ﾛｯｶｸｱﾅﾎﾞﾙﾄ M4X0.7 L=6	(1)

足踏みスタートペダル関係（オプション）

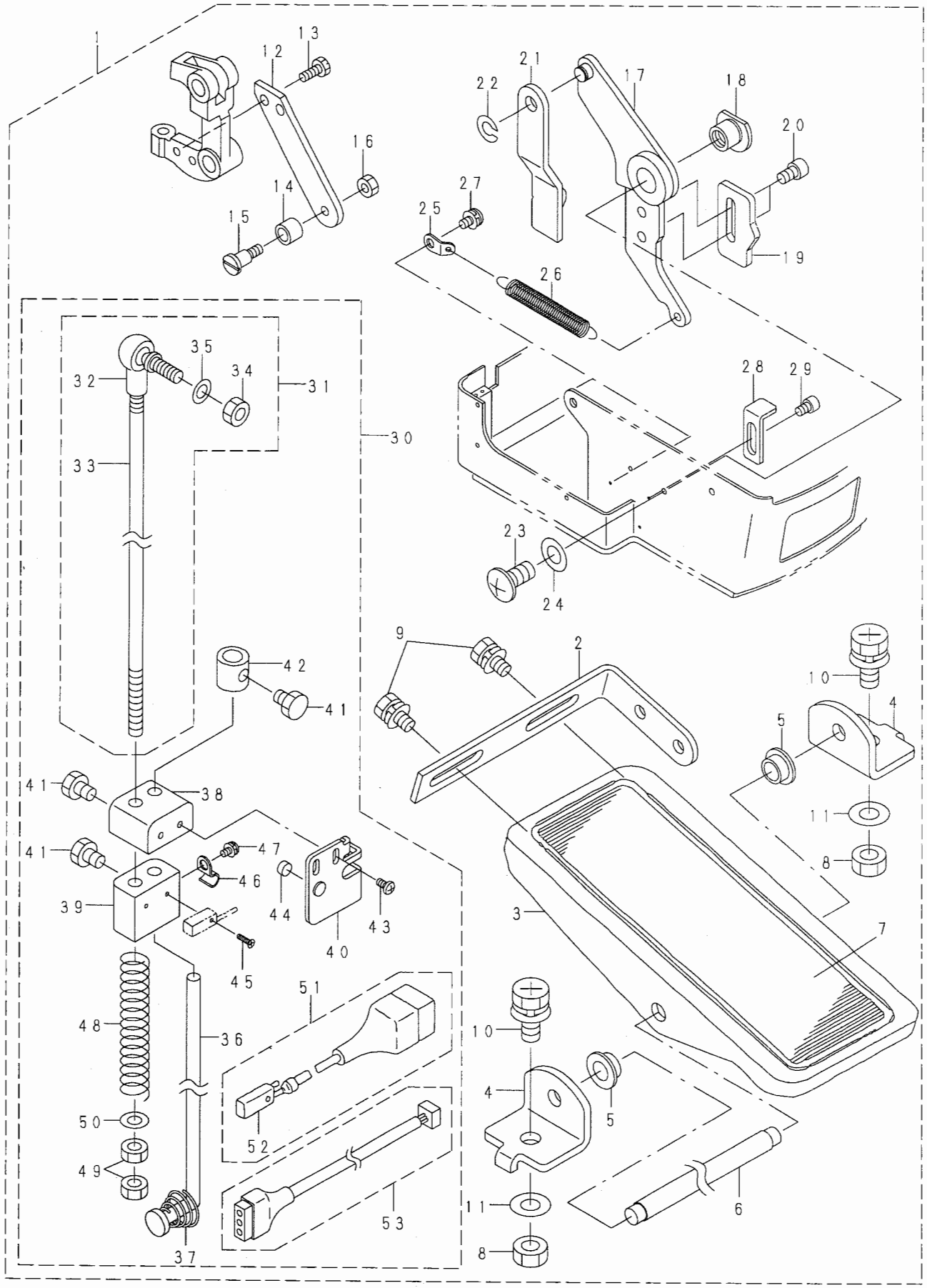

REF. NO	NOTE	PART NO.	D E S C R I P T I O N	ヒ ン メ イ	Qty
1		140-18956	PEDAL ASM.	ﾍﾟﾀﾞﾙｹﾂｺﾞｳ B	1
2		GPF-06080000	PEDAL ADJUSTING PLATE	ﾌﾐｲﾀ ﾁｮｳｾﾂﾊﾞﾝ	(1)
3		GPF-06060000	PEDAL	ﾍﾟﾀﾞﾙ	(1)
4		111-59001	PEDAL SHAFT BRACKET	ﾌﾐｲﾀ ｼﾞｸｳｹ	(2)
5		D8113-555-B00	PEDAL BUSHING	ﾌﾐｲﾀ ﾌﾞｯｼｭ	(2)
6		B8153-771-000	PEDAL CONNECTING ROD	ﾍﾟﾀﾞﾙｼﾞｸ	(1)
7		GPF-06070000	PEDAL MAT	ﾍﾟﾀﾞﾙ ﾏｯﾄ	(1)
8		NM-6080001-SE	NUT M8	ﾛｯｶｸﾅｯﾄ M8 1ｼｭ	(2)
9		SL-9061291-SE	WASHER HEXAGONAL BOLT M6 L=12	ｻﾞｶﾞﾈｯｷﾛｯｶｸﾎﾞﾙﾄ	(2)
10		SL-9082091-SE	WASHER HEXAGONAL BOLT	ｻﾞｶﾞﾈｯｷﾛｯｶｸﾎﾞﾙﾄ	(2)
11		WP-0871602-SE	WASHER 8.7X18X1.6	ﾋﾗｻﾞｶﾞﾈ 8.7X18X1.6	(2)
12		140-18808	CONNECTING	ｵｻｴｸﾄﾞｳﾚﾝｹﾂｲﾀ	(1)
13		SM-9041050-SC	SCREW M4X0.7 L=10	ﾛｯｶｸﾎﾞﾙﾄ M4X0.7 L=10	(2)
14		135-22909	SLIDE ROLLER	ｷﾄﾞｰﾚﾊﾞｰｺﾛ	(1)
15		SD-0640801-TP	HINGE SCREW D= 6.35 H= 8.0	ﾀﾞﾝﾈｼﾞ D=6.35 H=8	(1)
16		NS-6110420-SP	NUT 11/64-40	ﾛｯｶｸﾅｯﾄ 11/64-40	(1)
17		140-19152	PRESSER FOOT DRIVING BASE ASM.	ｵｻｴｸﾄﾞｳﾀﾞｲ (ｸﾐ)	(1)
18		140-19400	BASE STOPPER	ｵｻｴｸﾄﾞｳﾀﾞｲﾄﾞﾒ	(1)
19		140-19509	ADJUSTING PLATE	ｵｻｴｸﾄﾞｳﾁｮｳｾﾂｲﾀ	(1)
20		SM-6050802-TP	SCREW M5X0.8 L=8	ﾛｯｶｸｱﾅﾎﾞﾙﾄ M5X0.7 L=8	(2)
21		140-19608	PEDAL CONNECTING PLATE	ﾍﾟﾀﾞﾙﾚﾝｹﾂｲﾀ	(1)
22		RC-0650811-KP	RETAINING RING	Cｶﾞﾀﾄﾒﾜ	(1)
23		SM-0081601-SC	SCREW	ﾄﾗｽﾈｼﾞ M8 L=16	(1)
24		WP-0901603-SB	WASHER	ﾋﾗｻﾞｶﾞﾈ 8.5X16X1.2	(1)
25		140-16901	SPRING HOOK	ｸﾄﾞｳｳﾃﾞﾓﾄﾞｼﾊﾞﾈｶｹ	(1)
26		140-18907	RETURN SPRING	ｵｻｴｸﾄﾞｳﾀﾞｲﾓﾄﾞｼﾊﾞﾈ	(1)
27		SL-4040891-SC	SCREW M4 L=8	ｻﾞｶﾞﾈｯｷ ﾅﾍﾞｺﾈｼﾞ M4 L=8	(1)
28		GBC-02420000	M.SW 2 OPERATING PLATE	MSW4 ｻﾄﾞｰｲﾀ	(1)
29		SM-6040602-TP	SCREW M4 L=6	ﾛｯｶｸｱﾅﾎﾞﾙﾄ M4X0.7 L=6	(1)
30		140-56360	CONNECTING ROD COMPLE.	ﾚﾝｹﾂﾎﾞｳ ｿｳｸﾐ	(1)
31		140-56352	UPPER CONNECTING ROD ASM.	ｳｴﾚﾝｹﾂﾎﾞｳ ｸﾐ	(1)
32		D7117-555-BA0	JOINT BAR A ASM.	ﾚﾝｹﾂﾎﾞ - A ｸﾐ	(1)
33		140-56303	UPPER CONNECTING ROD	ｳｴﾚﾝｹﾂﾎﾞｳ	(1)
34		NM-6060001-SE	NUT M6	ﾛｯｶｸﾅｯﾄ M6 1ｼｭ	(1)
35		WS-0641560-KR	SPRING WASHER 6.4X11.9X1.5	ﾊﾞﾈｻﾞｶﾞﾈ 6.4X11.9X1.5	(1)
36		140-56204	LOWER CONNECTING ROD	ｼﾀﾚﾝｹﾂﾎﾞｳ	(1)
37		D7133-555-B00	CONNECTING ROD SPRING	ｼﾀﾚﾝｹﾂﾎﾞ - ﾊﾞﾈ	(1)
38		MAT-03211000	MAGNET INSTALLING BASE	ｼﾞｼｬｸ ﾄﾘﾂｹﾀﾞｲ	(1)
39		MAT-03210000	PEDAL SWITCH INSTALLING BASE	ﾍﾟﾀﾞﾙｽｲｯﾁ ﾄﾘﾂｹﾀﾞｲ	(1)
40		MAT-03212000	MAGNET MOUNTING PLATE	ｼﾞｼｬｸ ﾄﾘﾂｹｲﾀ	(1)
41		SM-9060813-SE	SCREW M6 L=8	ﾛｯｶｸﾎﾞﾙﾄ M6 L=8	(3)
42		F1006-004-000	STOPPER	ﾚﾝｹﾂｻﾄﾞｳｽﾄｯﾊﾟｰ	(1)
43		SL-4030681-SC	SCREW M3 L=6	ｻﾞｶﾞﾈｯｷ ﾅﾍﾞｺﾈｼﾞ M3 L=6	(2)
44		MAT-01266000	MAGNET	ｼﾞｼｬｸ	(1)
45		SM-1020801-SN	SCREW M2 L=8	ｻﾗｺﾈｼﾞ M2 L=8	(1)
46		B3538-112-000	OIL RETURN TUBE HOLDER	ｶﾝﾘｭｳ ﾊﾟｲﾌﾟｵｻｴ	(1)
47		SL-4030681-SC	SCREW M3 L=6	ｻﾞｶﾞﾈｯｷ ﾅﾍﾞｺﾈｼﾞ M3 L=6	(1)
48		140-56402	CONNECTING ROD SPRING	ﾚﾝｹﾂﾎﾞｳﾊﾞﾈ	(1)
49		NM-6060003-SC	NUT M6	ﾛｯｶｸﾅｯﾄ M6	(2)
50		WP-0641601-SE	WASHER M6	ﾋﾗｻﾞｶﾞﾈ	(1)
51		140-77150	PEDAL SWITCH ASM.	ﾍﾟﾀﾞﾙｽｲｯﾁ (ｸﾐ)	(1)
52		HD-0006000-00	SENSOR	ｷﾝｾﾂ ｾﾝｻ	(1)
53		140-77168	PEDAL SWITCH CORD ASM.	ﾍﾟﾀﾞﾙｽｲｯﾁｾﾝ (ｸﾐ)	(1)

交換ゲージ・オプション一覧表（1）

※印部品は標準装備部品

針板

品名	標準	準広幅用	広幅用	細針用	太針用
形状	※ 芯糸位置 1.3mm	1.8mm	2.4mm	1.5mm 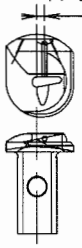	1.8mm 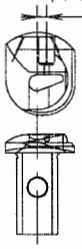
品番	14009500	14009609	14009708	14060602	14060305

押え足

	品名	鳩目用40mm	鳩目用32mm	鳩目用22mm	眠り目用40mm	段差付き40mm
押え足左	形状	※ 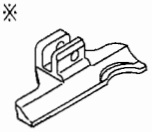	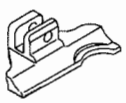	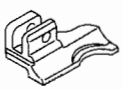	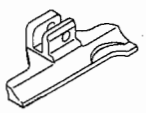	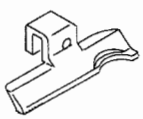
	品番	14010102	14059604	14059802	14013908	14058903
押え足右	品名	鳩目用40mm	鳩目用32mm	鳩目用22mm	眠り目用40mm	段差付き40mm
	形状	※ 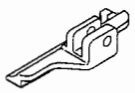			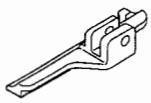	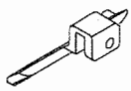
	品番	14010003	14059505	14059703	14013809	14058804

押え受け板

内容	鳩目用		眠り目用	
品名	鳩目用（左）	鳩目用（右）	眠り目用（左）	眠り目用（右）
形状	※	※		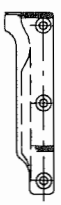
品番	14011506	14011407	14013700	14013601

30. TABLE OF EXCHANGING GAUGE PARTS & OPTION (2)

交換ゲージ・オプション一覧表（２）

※印部品は標準装備部品

流れ門止めなし	品名	先メス用	後メス用	眠り目用		
	形状	※ 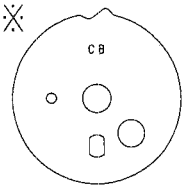	※ 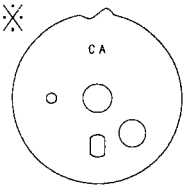	※ 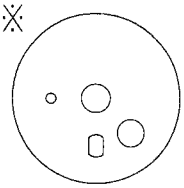		
	品番	14037006	14037105	14037204		
流れ門止め有り 流れ門止め上	品名	先メス用	後メス用	眠り目用		
	形状	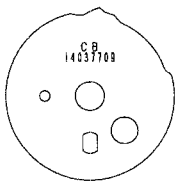	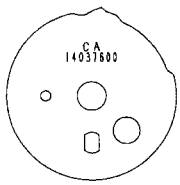	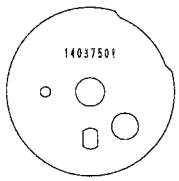		
	品番	14037709	14037600	14037501		
流れ門止め有り 流れ門止め下	品名	32mm	29mm	26mm	22mm	19mm
	形状	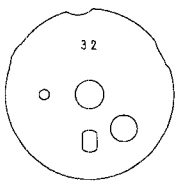	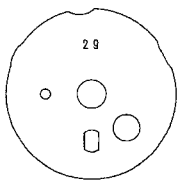	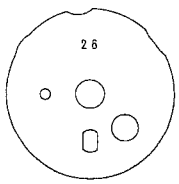	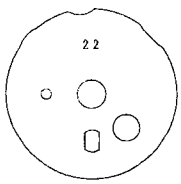	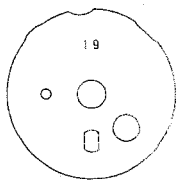
	品番	14037808	14037907	14038004	14038103	14038202
	品名	16mm	13mm	10mm		
	形状	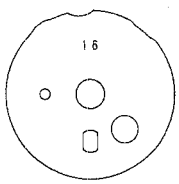	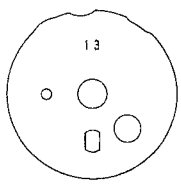	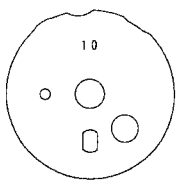		
	品番	14038301	14038400	14038509		

交換ゲージ・オプション一覧表（3）

※印部品は標準装備部品

布切りメス

品　名	鳩　目　用	眠　り　目　用
形状	※ 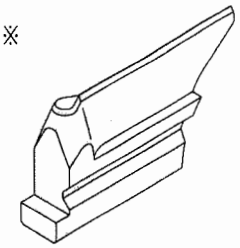	※ 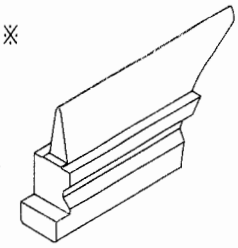
品　番	14041206	14041404

メス受け

品　名		鳩　目　用	眠　り　目　用
形状		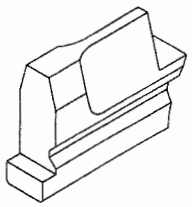	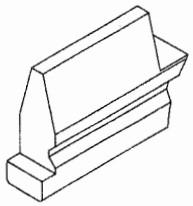
メス受け長さ（mm）	40	14041503	14042501
	32	14041602	14042600
	29	14041701	14042709
	26	14041800	14042808
	22	※ 14041909	※ 14042907
	19	14042006	14043004
	16	14042105	14043103
	13	14042204	14043202
	10	14042303	14043301

その他

品　名	縦ガイド（左）組	縦ガイド（右）組	横ガイド（組）	布屑シュートノズル（組）	テーパーピン抜き
形状・用途	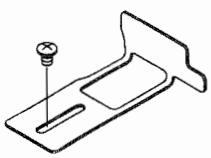 縦方向の布位置決めガイド（左）	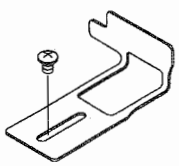 縦方向の布位置決めガイド（右）	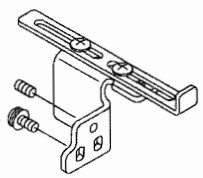 横方向の位置決めガイド	布屑をミシン頭部上から落とすノズル	テーパーピンを抜く際に使用する工具
品　番	14059158	14059059	14059356	14059950	14059208

NUMERICAL INDEX OF PARTS 索引

PART NO 品番	PAGE 頁	REF NO
BNE-GSET0003	36	27
BT-0500300-EA	34	5
B1114-180-000	2	5
B1134-850-000-A	28	19
B1135-850-000	28	16
B1147-141-H00	30	31
B1149-352-000	26	32
B1506-352-000	24	68
B1513-210-000	28	18
B1516-180-000	12	76
B2021-771-000	18	6
B2313-180-000	28	33
B2347-180-000	12	12
B2740-771-000	2	29
B3108-850-000	44	10
B3112-704-000	30	50
B3113-352-000	28	26
B3113-352-000	28	29
B3118-552-G00	30	45
B3120-372-000	40	4
B3121-372-000	40	8
B3126-012-000	30	47
B3132-552-000	30	48
B3214-047-000	28	22
B3305-704-000-A	48	8
B3311-012-000	48	17
B3311-704-000	48	2
B3317-704-000	48	12
B3318-704-L00-A	48	3
B3319-704-L00	48	6
B3320-704-L00-A	48	16
B3423-180-000	6	27
B3423-180-000	26	7
B3434-180-000	12	8
B3434-180-000	12	79
B3434-180-000	26	8
B3501-210-000	34	6
B3538-112-000	34	20
B3538-112-000	56	46
B7101-761-BA0	36	19
B7114-012-000	54	15
B8153-771-000	54	6
B8153-771-000	56	6
B8202-205-000	50	25
B8204-012-000	50	3
B9121-012-000	50	30
CM-2001000-01	52	52
CM-3001000-04	52	51
CM-3001001-02	52	50
CS-1201010-SH	24	26
CS-1201010-SH	34	25
CS-1601211-TH	24	75
D1636-415-D0B	6	19
D2464-555-B00	18	1
D7117-555-BA0	56	32
D7133-555-B00	54	18
D7133-555-B00	56	37
D8113-555-B00	54	5
D8113-555-B00	56	5
D8204-555-D00	42	21
D8204-555-D00	42	27
D8204-555-D00	42	28
D8204-555-D00	50	5
EA-9500B00-00	44	14
EA-9500B01-00	46	16
EA-9500B02-00	44	15
E8760-452-B00	46	12
E8760-452-D00	46	13
E8760-452-D00	46	28
F1006-004-000	56	42
GBC-02420000	54	35
GBC-02420000	56	28
GPF-06060000	54	3
GPF-06060000	56	3
GPF-06070000	54	7
GPF-06070000	56	7
GPF-06080000	54	2
GPF-06080000	56	2
G1003-192-0A0	52	3
G5314-161-000	4	29
G5523-880-000	14	6
G6028-870-000	16	17
HA-0028100-00	42	16
HA-0033500-0A	46	3
HA-0033500-00	46	26
HA-0033500-3A	46	19
HA-0033500-3B	46	5
HA-0033500-30	46	18
HA-0033500-40	46	4
HA-0033500-40	46	27
HB-0008100-10	52	55
HD-0003600-0A	46	9
HD-0003800-00	46	8
HD-0006000-00	56	52
HD-0006600-00	46	7
HD-0006600-10	24	63
HF-0015010-00	52	58
HF-0015050-P0	52	57
HF-0037030-PA	52	56
HG-0022700-0A	46	22
HK-0165100-20	52	43
HK-0165101-00	46	24
HK-0165400-00	46	25
HK-0290103-00	46	14
HK-0290400-00	46	15
HW-0007700-30	46	11
HW-0008400-40	46	10
HW-5002900-00	46	23
HX-0006500-0A	44	16
HX-0015000-0C	46	32
HX-0015000-0D	46	33
HX-0015000-0F	46	34
HX-0015000-0L	44	17
HX-0015000-00	46	31
HX-0021000-00	42	13
HX-0021000-00	42	19
HX-0022200-0A	52	49
HX-0023500-0E	52	47
HX-0032600-0C	52	46
HX-0033900-00	52	15
HX-0035400-0E	52	21
HX-0035400-00	52	18
HX-0035400-00	52	20
HX-0040700-00	52	44
HX-0040800-00	52	25
MA0-11532000	42	20
MA0-11532000	48	13
MAT-01266000	56	44
MAT-03210000	56	39
MAT-03211000	56	38
MAT-03212000	56	40
MC-1858010-00	8	28
MTJ-MGC00000	36	26
MTJ-MS00000S	36	20
MTJ-MS000000	36	21
MTJ-VM002100	36	14
MTJ-VM003300	36	18
MTJ-VM003800	36	25
M3011-110-000	52	45
M4002-110-000	16	29
M4007-110-0AA	16	24
M4007-110-0AB	16	25
M8601-801-0B0	52	22
M8602-801-0A0	52	19
M8603-801-0A0	52	24
M8604-801-0A0	52	17
M8808-301-000	52	6
NM-3040520-SE	52	39
NM-6030001-SN	30	3
NM-6030003-SC	12	22
NM-6030003-SC	30	20
NM-6030003-SC	32	7
NM-6040001-SC	24	62
NM-6040001-SC	24	67
NM-6040001-SD	30	29
NM-6040001-SN	10	13
NM-6040001-SN	10	40
NM-6040001-SN	12	75
NM-6040001-SN	32	5
NM-6040002-SE	20	6
NM-6040003-SC	30	1
NM-6040003-SC	32	35
NM-6040003-SC	34	16
NM-6050001-SE	48	10
NM-6050001-SE	48	19
NM-6050003-SC	12	26
NM-6050003-SC	12	83
NM-6050003-SC	18	26
NM-6050003-SC	22	1
NM-6050003-SC	22	3
NM-6050003-SC	22	40
NM-6050003-SC	24	71
NM-6060001-CP	6	43
NM-6060001-SC	4	47
NM-6060001-SC	14	2
NM-6060001-SC	18	16
NM-6060001-SC	18	59
NM-6060001-SC	24	20
NM-6060001-SC	42	26
NM-6060001-SE	36	31
NM-6060001-SE	56	34
NM-6060002-SE	6	29
NM-6060003-SC	6	30
NM-6060003-SC	12	4
NM-6060003-SC	12	78
NM-6060003-SC	22	46
NM-6060003-SC	22	53
NM-6060003-SC	28	2
NM-6060003-SC	38	5
NM-6060003-SC	56	49
NM-6080001-SC	4	43
NM-6080001-SC	16	33
NM-6080001-SC	24	40
NM-6080001-SD	2	37
NM-6080001-SE	54	8
NM-6080001-SE	56	8
NM-6080002-SE	6	31
NM-6080003-SC	2	12
NM-6080003-SC	12	73
NM-6080003-SC	18	14
NM-6080721-SE	54	17
NM-6100001-SC	2	30
NM-6100001-SC	12	14
NM-6120003-SC	16	31
NM-6160003-SB	24	47
NM-6510515-SC	4	34
NM-6510515-SC	24	6
NM-6550815-SF	24	35
NM-6550825-SF	6	13
NM-6610515-SC	26	11
NM-9040001-SC	24	72
NS-6110310-SP	40	11
NS-6110420-SP	54	23
NS-6110420-SP	56	16
NS-6200710-SN	36	24
NS-6240630-SN	36	13
PH-0300074-S0	12	69
PH-0400202-C0	4	7
PH-0500165-S0	24	9
PS-0200062-KH	12	32
PS-0200062-KH	40	10
PS-0200122-KH	22	15
PS-0400182-K0	6	26
RC-0150001-KP	36	7
RC-0470611-KP	10	24
RC-0470611-KP	10	45
RC-0560711-KP	18	21
RC-0650811-KP	18	53
RC-0650811-KP	18	54
RC-0650811-KP	24	44
RC-0650811-KP	54	29
RC-0650811-KP	56	22
RC-0740811-KP	18	28
RC-1400001-KP	26	33
RC-1600001-KP	14	9
RC-3200002-K0	24	17
RE-0120000-K0	4	38
RE-0400000-K0	12	17
RE-0400000-K0	18	2
RE-0400000-K0	30	13
RE-0400000-K0	32	9
RE-0500000-K0	32	21
RE-0700000-K0	4	42
RE-0900000-K0	8	7
R0-0982401-00	8	33
SB-1070005-00	24	45
SB-1100016-00	8	8
SB-1150004-00	36	5
SB-3100009-00	18	39
SB-3200005-00	16	10
SB-3250002-00	24	12
SB-3250003-00	14	17
SD-0500456-TP	10	21
SD-0500456-TP	10	42
SD-0501006-TP	10	58
SD-0601021-SP	40	5
SD-0640321-SP	30	22
SD-0640471-SP	18	60
SD-0640801-TP	54	22
SD-0640801-TP	56	15
SD-0791501-SP	2	27
SD-0800276-TP	12	31
SK-3311600-SC	50	4
SK-3311600-SC	50	26
SK-3382001-SC	50	28
SK-3512001-SF	42	22
SK-3513200-SC	50	24
SK-3552500-SC	38	13
SL-4030631-SC	28	39
SL-4030681-SC	52	23
SL-4030681-SC	56	43
SL-4030681-SC	56	47
SL-4030691-SC	2	21
SL-4030691-SC	52	8
SL-4031091-SC	2	22
SL-4040691-SC	4	25
SL-4040691-SC	38	1
SL-4040691-SC	38	9
SL-4040881-SC	12	56
SL-4040891-SC	12	39
SL-4040891-SC	12	46
SL-4040891-SC	18	56
SL-4040891-SC	32	24
SL-4040891-SC	34	1
SL-4040891-SC	34	8
SL-4040891-SC	34	21
SL-4040891-SC	44	13
SL-4040891-SC	44	18
SL-4040891-SC	46	30
SL-4040891-SC	52	13
SL-4040891-SC	52	16
SL-4040891-SC	52	42
SL-4040891-SC	52	54

PART NO 品番	PAGE 頁	REF NO
SL-4040891-SC	54	34
SL-4040891-SC	56	27
SL-4041091-SC	2	2
SL-4041091-SC	12	50
SL-4041091-SC	16	34
SL-4041091-SC	24	79
SL-4041091-SC	28	10
SL-4041091-SC	28	11
SL-4041091-SC	28	30
SL-4041091-SC	34	23
SL-4041091-SC	42	6
SL-4041091-SC	44	6
SL-4041091-SC	44	11
SL-4041091-SC	52	4
SL-4041091-SC	52	11
SL-4041091-SC	52	41
SL-4041281-SC	42	18
SL-4041281-SC	52	40
SL-4041291-SC	12	47
SL-4041291-SC	44	8
SL-4041691-SC	14	27
SL-4041691-SC	30	24
SL-4042235-SP	28	15
SL-4051091-SC	14	25
SL-4051691-SC	2	39
SL-4061691-SL	4	46
SL-9061291-SE	54	9
SL-9061291-SE	56	9
SL-9082091-SE	50	10
SL-9082091-SE	54	10
SL-9082091-SE	56	10
SM-0030301-SN	10	16
SM-0030601-SC	12	42
SM-0040601-SC	52	9
SM-0040801-SC	2	3
SM-0040801-SC	12	54
SM-0040801-SC	18	41
SM-0040801-SC	40	12
SM-0040801-SF	4	16
SM-0051201-SC	2	13
SM-0051201-SC	14	26
SM-0081601-SC	54	30
SM-0081601-SC	56	23
SM-1020801-SN	56	45
SM-1030400-SP	10	15
SM-1030400-SP	10	38
SM-1030501-SC	2	25
SM-1041001-SP	24	16
SM-1061201-SN	14	23
SM-3065052-TC	42	23
SM-3065052-TC	52	59
SM-4030455-SN	32	1
SM-4030455-SP	6	24
SM-4040655-SN	30	16
SM-4040655-SN	30	27
SM-4040655-SP	30	34
SM-4041001-SN	28	42
SM-4043050-SC	10	52
SM-4043501-SE	20	5
SM-4050801-SC	10	55
SM-4051405-SE	48	9
SM-5030801-SC	18	34
SM-5040601-SC	10	56
SM-5040855-SN	30	42
SM-5041455-SN	22	61
SM-6030402-TP	18	30
SM-6030402-TP	26	15
SM-6030402-TP	26	25
SM-6030600-SP	22	25
SM-6030602-TP	8	24
SM-6030602-TP	10	49
SM-6030602-TP	18	61
SM-6030602-TP	24	81
SM-6030602-TP	26	5
SM-6030602-TP	30	11
SM-6030802-TP	22	4
SM-6030802-TP	24	65
SM-6030802-TP	26	2
SM-6030860-SP	10	9
SM-6030860-SP	10	34
SM-6031202-TP	8	14
SM-6031202-TP	12	23
SM-6032002-TN	30	18
SM-6040502-TP	12	11
SM-6040502-TP	34	12
SM-6040502-TP	34	19
SM-6040602-TN	38	12
SM-6040602-TP	6	12
SM-6040602-TP	32	28
SM-6040602-TP	54	36
SM-6040602-TP	56	29
SM-6040802-TP	32	14
SM-6041002-SC	26	10
SM-6041002-TP	4	28
SM-6041002-TP	22	37
SM-6041202-TP	10	47
SM-6041202-TP	22	7
SM-6041202-TP	24	19
SM-6041402-TP	6	8
SM-6041402-TP	8	20
SM-6041602-TP	12	74
SM-6041602-TP	24	61
SM-6041602-TP	26	26
SM-6041610-SC	10	2
SM-6041610-SC	10	26
SM-6044552-TP	34	13
SM-6050802-TP	24	11
SM-6050802-TP	32	32
SM-6050802-TP	54	27
SM-6050802-TP	56	20
SM-6051002-TP	18	46
SM-6051202-TP	30	6
SM-6051202-TP	32	29
SM-6051400-SP	26	35
SM-6052002-TP	12	82
SM-6060802-TP	24	59
SM-6060802-TP	24	73
SM-6061002-TP	18	57
SM-6061200-SP	12	68
SM-6061202-TP	18	55
SM-6061602-TP	4	9
SM-6061602-TP	12	7
SM-6061602-TP	12	51
SM-6061602-TP	12	65
SM-6061602-TP	12	70
SM-6061602-TP	18	32
SM-6061610-SC	48	4
SM-6061650-TP	20	12
SM-6061802-TP	24	54
SM-6062002-TP	4	14
SM-6062502-TP	6	41
SM-6063002-TP	18	58
SM-6081542-CP	24	4
SM-6081802-TP	4	10
SM-6082002-TR	36	2
SM-6082502-TP	24	23
SM-6082502-TP	24	64
SM-6084502-TP	4	4
SM-6085002-TP	4	5
SM-6088002-TP	2	32
SM-6101602-TP	4	32
SM-6850600-SP	22	30
SM-7430510-TM	8	27
SM-8030412-TP	22	60
SM-8030440-SF	8	10
SM-8030450-TP	32	11
SM-8030802-TP	32	8
SM-8040402-TP	12	21
SM-8040402-TP	30	23
SM-8040602-TP	6	4
SM-8040602-TP	6	35
SM-8040602-TP	8	2
SM-8040602-TP	8	4
SM-8040602-TP	10	5
SM-8040602-TP	10	28
SM-8040602-TP	28	6
SM-8040602-TP	30	33
SM-8040602-TP	30	39
SM-8041012-TP	32	15
SM-8041552-TP	30	2
SM-8042502-TP	24	50
SM-8050502-TP	8	29
SM-8050602-TP	28	41
SM-8050612-TP	6	22
SM-8050612-TP	8	11
SM-8050612-TP	16	1
SM-8050612-TP	16	4
SM-8050612-TP	16	13
SM-8050612-TP	20	2
SM-8050612-TP	20	10
SM-8050612-TP	20	13
SM-8050812-TP	2	20
SM-8050812-TP	14	10
SM-8050812-TP	16	15
SM-8050812-TP	30	43
SM-8050842-TP	12	64
SM-8051402-TP	18	25
SM-8060602-TP	10	22
SM-8060602-TP	10	43
SM-8060802-TP	6	44
SM-8060802-TP	20	17
SM-8060802-TP	22	48
SM-8060802-TP	22	56
SM-8060802-TP	32	16
SM-8061002-TP	2	9
SM-8061002-TP	14	13
SM-8061002-TP	14	19
SM-8061002-TP	16	6
SM-8061002-TP	18	52
SM-8061002-TP	24	57
SM-8061002-TP	36	10
SM-8061242-TP	14	14
SM-8061242-TP	16	7
SM-8511650-TP	4	33
SM-8511650-TP	24	5
SM-9041050-SC	54	20
SM-9041050-SC	56	13
SM-9051203-SD	24	70
SM-9051400-SN	26	29
SM-9060813-SE	56	41
SM-9061203-SE	36	15
SM-9063003-SC	38	4
SM-9063213-CN	36	28
SM-9064053-SE	18	17
SM-9081423-SE	54	16
SM-9083003-SC	2	11
SM-9086523-SE	50	20
SS-4110715-SP	40	2
SS-6111052-TP	18	10
SS-6111210-SP	16	27
SS-8151550-SP	16	26
SS-8660610-TP	24	27
SS-8660610-TP	24	60
SS-8660610-TP	34	27
TA-0750505-RO	2	7
WP-0320501-SD	18	38
WP-0320501-SD	24	66
WP-0380516-SD	24	80
WP-0430800-SC	24	82
WP-0430800-SD	30	35
WP-0430801-SC	30	28
WP-0430801-SC	38	11
WP-0430801-SE	10	3
WP-0430801-SE	10	27
WP-0430801-SE	32	4
WP-0430801-SE	34	14
WP-0450801-SD	16	28
WP-0450801-SD	40	3
WP-0531000-SC	22	41
WP-0531000-SC	22	59
WP-0531000-SC	32	30
WP-0531001-SC	18	45
WP-0561616-SC	38	14
WP-0600116-KP	24	58
WP-0612056-SD	36	17
WP-0612056-SE	36	29
WP-0641600-SC	18	33
WP-0641600-SC	28	3
WP-0641600-SC	38	6
WP-0641601-SC	22	45
WP-0641601-SC	22	52
WP-0641601-SE	56	50
WP-0651001-SC	42	24
WP-0651001-SC	52	60
WP-0740516-SP	40	7
WP-0841601-SC	6	32
WP-0841601-SE	4	45
WP-0850002-SC	12	72
WP-0850002-SC	24	39
WP-0850002-SC	36	3
WP-0850002-SC	36	22
WP-0852086-SC	2	33
WP-0871602-SE	50	18
WP-0871602-SE	54	11
WP-0871602-SE	56	11
WP-0901603-SB	54	31
WP-0901603-SB	56	24
WP-1002036-SC	6	14
WP-1020616-SD	8	32
WP-1021016-SD	4	30
WP-1052000-SC	16	32
WP-1052000-SC	24	33
WP-1102016-SC	36	12
WP-1302501-SE	16	30
WP-1302501-SE	50	21
WP-1612616-SE	48	14
WS-0310002-KR	30	19
WS-0610002-KN	42	25
WS-0610002-KN	52	61
WS-0621210-KR	36	16
WS-0621210-KR	36	30
WS-0641560-KR	56	35
WS-0820002-KP	2	36
WS-0820002-KR	4	44
WS-0861410-KR	50	19
WS-0902010-KN	36	23
WS-1020002-KN	6	16
WS-1253010-KN	50	22
WT-0430002-KN	42	7
WZ-0320290-UZ	10	12
WZ-0320290-UZ	10	31
WZ-0420350-KP	4	35
WZ-0520550-KP	14	4
WZ-0620550-KP	6	28
WZ-1120850-KP	12	81
100-04109	42	8
100-32001	16	3
101-12704	22	35
110-18702	28	7
110-30301	34	11
110-45309	28	24
111-55801	50	29
111-56007	50	27
111-57658	50	15
111-57757	50	9
111-57955	50	7
111-58052	50	12
111-58300	50	8
111-58409	50	14
111-58508	50	11
111-58607	50	13

NUMERICAL INDEX OF PARTS 索引

PART NO 品番	PAGE 頁	REF NO
111-59001	54	4
111-59001	56	4
111-59357	50	6
111-59407	50	23
111-59506	50	17
111-85105	48	11
111-85204	48	7
111-85501	48	15
115-71908	36	11
118-49502	50	2
119-66504	48	18
119-69409	48	5
121-24202	28	35
121-26819	30	51
135-22909	54	21
135-22909	56	14
138-49260	48	1
138-87005	6	11
139-43204	40	6
140-00103	4	2
140-00152	4	1
140-00202	4	6
140-00301	4	8
140-00400	4	13
140-00509	4	12
140-00608	4	11
140-00707	4	3
140-00806	4	22
140-01002	4	21
140-01101	4	31
140-01200	4	20
140-01309	4	23
140-01408	4	18
140-01507	4	19
140-01606	4	17
140-01705	4	15
140-01804	4	24
140-01903	2	15
140-02000	2	14
140-02109	2	16
140-02208	2	17
140-02307	2	18
140-02406	2	8
140-02505	2	6
140-02604	2	38
140-02703	2	1
140-02802	2	4
140-02901	2	23
140-03008	2	24
140-03107	2	40
140-03305	2	26
140-03503	2	19
140-03602	2	10
140-03701	2	34
140-03800	2	35
140-04006	4	27
140-04105	4	26
140-04204	4	36
140-04303	4	37
140-04402	4	48
140-04501	4	39
140-04600	4	41
140-04709	4	40
140-04808	2	31
140-04907	2	28
140-05052	8	13
140-05201	8	5
140-05300	8	6
140-05409	8	9
140-05508	8	16
140-05607	8	15
140-05706	6	5
140-05805	6	2
140-05854	6	1
140-05904	6	3
140-05904	16	2
140-05904	20	3
140-05904	20	15
140-06001	6	6
140-06100	6	7
140-06209	8	12
140-06308	6	18
140-06407	6	10
140-06506	6	9
140-06506	8	17
140-06654	6	17
140-06902	6	15
140-07009	8	18
140-07108	6	40
140-07207	6	38
140-07306	6	39
140-07405	6	42
140-07504	6	36
140-07603	6	34
140-07702	6	33
140-07801	6	37
140-08056	6	20
140-08205	6	21
140-08353	6	23
140-08403	6	25
140-08650	8	19
140-08809	8	3
140-08908	8	25
140-09005	8	26
140-09104	8	23
140-09203	8	22
140-09302	8	21
140-09401	8	1
140-09500	8	31
140-09807	8	30
140-10003	10	36
140-10052	10	25
140-10102	10	10
140-10151	10	1
140-10201	10	30
140-10300	10	4
140-10409	10	44
140-10508	10	11
140-10508	10	35
140-10805	10	7
140-10805	10	32
140-10904	10	8
140-10904	10	33
140-11001	10	6
140-11001	10	29
140-11100	10	23
140-11209	10	39
140-11308	10	19
140-11407	10	37
140-11506	10	14
140-11605	10	20
140-11605	10	41
140-11803	10	17
140-11902	10	18
140-12009	10	50
140-12108	10	51
140-12207	10	46
140-12306	10	48
140-12504	10	59
140-12702	10	60
140-12801	10	57
140-12900	10	53
140-13007	10	54
140-13106	12	48
140-13205	12	49
140-14005	12	34
140-14104	12	29
140-14203	12	35
140-14302	12	36
140-14401	12	37
140-14500	12	38
140-14609	12	33
140-14807	12	30
140-15101	12	28
140-15200	12	44
140-15309	12	45
140-15507	12	58
140-15556	12	57
140-15606	12	59
140-15705	12	60
140-15804	12	61
140-15903	12	62
140-16000	12	63
140-16109	12	66
140-16208	12	67
140-16307	12	71
140-16406	12	77
140-16505	12	80
140-16604	12	52
140-16703	12	41
140-16802	12	53
140-16901	12	40
140-16901	32	25
140-16901	54	32
140-16901	56	25
140-17008	12	19
140-17107	12	20
140-17206	12	25
140-17305	12	24
140-17404	12	27
140-17503	12	6
140-17552	12	1
140-17602	12	9
140-17701	12	10
140-17909	12	2
140-18006	12	3
140-18105	12	5
140-18204	12	18
140-18303	12	13
140-18550	12	15
140-18709	12	16
140-18808	54	19
140-18808	56	12
140-18857	54	1
140-18907	54	33
140-18907	56	26
140-18956	56	1
140-19152	54	24
140-19152	56	17
140-19400	54	25
140-19400	56	18
140-19509	54	26
140-19509	56	19
140-19608	54	28
140-19608	56	21
140-19707	12	55
140-19905	12	43
140-20002	14	15
140-20150	14	8
140-20200	14	11
140-20309	14	7
140-20507	14	16
140-20606	14	18
140-20705	14	20
140-21109	14	21
140-21208	14	22
140-21307	14	3
140-21406	14	5
140-21505	14	1
140-21604	14	12
140-21604	26	36
140-21703	14	24
140-22008	16	9
140-22107	16	16
140-22206	16	23
140-22255	16	22
140-22305	16	14
140-22404	16	8
140-22602	16	5
140-22701	16	11
140-22800	16	12
140-23006	16	21
140-23105	16	18
140-23204	16	19
140-23303	16	20
140-23501	18	20
140-23550	18	15
140-23600	18	18
140-23709	18	19
140-23808	18	12
140-23907	18	11
140-24004	18	13
140-24103	18	27
140-24202	18	24
140-24301	18	23
140-24509	18	51
140-24608	18	3
140-24707	18	4
140-24806	18	5
140-24905	18	7
140-25001	18	22
140-25100	18	8
140-25209	18	9
140-25506	18	36
140-25605	18	49
140-25605	24	25
140-25704	18	37
140-25704	24	29
140-25852	18	31
140-26009	18	35
140-26108	18	50
140-26207	18	29
140-26306	18	48
140-26405	18	47
140-26504	18	40
140-26603	18	44
140-26751	18	42
140-26900	18	43
140-27007	20	4
140-27106	20	1
140-27205	20	7
140-27304	20	16
140-27403	20	14
140-27502	20	11
140-27601	20	8
140-27700	20	9
140-28005	22	44
140-28054	22	39
140-28104	22	43
140-28203	22	47
140-28203	22	55
140-28302	22	42
140-28401	22	49
140-28559	22	34
140-28708	22	36
140-28807	22	9
140-29003	22	51
140-29052	22	50
140-29102	22	54
140-29201	22	38
140-29300	22	57
140-29409	22	58
140-29508	22	6
140-29755	22	32
140-29904	22	27
140-30001	22	12
140-30100	22	26
140-30209	22	24
140-30308	22	33
140-30506	22	13
140-30605	22	11
140-30704	22	10
140-30803	22	21
140-30902	22	20

PART NO 品番	PAGE 頁	REF NO
140-31009	22	22
140-31108	22	19
140-31207	22	23
140-31306	22	18
140-31504	22	28
140-31603	22	2
140-31702	22	14
140-31801	22	16
140-31900	22	5
140-32007	22	8
140-32106	22	17
140-32304	22	29
140-32403	22	31
140-32502	24	13
140-32551	24	7
140-32601	24	10
140-32700	24	14
140-32809	24	15
140-32908	24	8
140-33005	24	1
140-33104	24	3
140-33203	24	2
140-33450	24	21
140-33708	24	22
140-33807	24	18
140-33906	24	78
140-34003	24	31
140-34102	24	32
140-34201	24	30
140-34300	24	34
140-34409	24	36
140-34508	24	38
140-34607	24	37
140-34706	24	24
140-34805	24	28
140-34904	24	41
140-35000	24	53
140-35109	24	51
140-35307	24	52
140-35505	24	55
140-35604	24	56
140-35703	24	43
140-35802	24	46
140-35950	24	42
140-36206	24	69
140-36305	24	49
140-36404	24	77
140-36503	24	76
140-36602	24	74
140-37006	24	48
140-39002	26	3
140-39101	26	12
140-39200	26	16
140-39309	26	18
140-39408	26	17
140-39507	26	19
140-39606	26	13
140-39705	26	4
140-39804	26	1
140-39903	26	20
140-40000	26	21
140-40109	26	14
140-40208	26	6
140-40356	26	9
140-40505	26	31
140-40703	26	30
140-40802	26	27
140-40901	26	24
140-41008	26	28
140-41107	26	34
140-41206	26	22
140-41909	26	23
140-43400	26	37
140-44051	28	1
140-44200	28	4
140-44309	28	5
140-44408	28	8
140-44507	28	9
140-44606	28	12
140-44804	28	27
140-44903	28	17
140-45009	28	21
140-45108	28	23
140-45207	28	13
140-45306	28	14
140-45405	28	20
140-45504	28	25
140-45603	28	28
140-45801	28	31
140-45900	28	32
140-46007	28	40
140-46205	28	34
140-46304	28	37
140-46403	28	36
140-46403	28	38
140-46809	30	37
140-46908	30	46
140-47005	30	49
140-47203	30	44
140-47302	30	41
140-47401	30	40
140-47500	30	38
140-47609	30	36
140-47708	30	32
140-47807	30	26
140-47906	30	30
140-48102	30	7
140-48201	30	10
140-48300	30	15
140-48409	30	8
140-48557	30	5
140-48805	30	25
140-48904	30	21
140-49100	30	17
140-49209	30	9
140-49308	30	4
140-49407	30	12
140-49506	30	14
140-49605	30	52
140-50009	32	2
140-50157	32	3
140-50306	32	6
140-50405	32	10
140-50652	32	18
140-50660	32	17
140-50959	32	19
140-51007	32	20
140-51106	32	22
140-51205	32	23
140-51304	32	26
140-51502	32	31
140-51601	32	27
140-51700	32	34
140-51809	32	33
140-51908	32	13
140-52054	34	7
140-52203	34	4
140-52302	34	3
140-52401	34	2
140-53003	34	15
140-53102	34	9
140-53409	34	22
140-53508	34	24
140-53607	34	10
140-53706	34	18
140-53805	34	17
140-53904	34	26
140-55008	36	1
140-55107	36	4
140-55206	36	6
140-55305	36	8
140-55404	36	9
140-55503	38	8
140-55602	38	10
140-55701	38	7
140-55800	38	3
140-55909	38	2
140-56006	50	1
140-56204	54	13
140-56204	56	36
140-56253	54	12
140-56303	56	33
140-56352	56	31
140-56360	56	30
140-56402	56	48
140-58309	40	9
140-58358	40	1
140-70650	52	27
140-70700	52	26
140-71104	42	15
140-71153	42	14
140-71401	42	17
140-72003	46	29
140-72102	44	7
140-72201	44	9
140-72300	44	12
140-72409	46	2
140-72854	42	9
140-72953	42	10
140-73050	42	11
140-73100	42	1
140-73209	42	2
140-73308	52	2
140-73357	52	1
140-73407	52	5
140-73506	52	10
140-73605	52	12
140-73704	52	14
140-73803	46	20
140-73902	46	21
140-74009	46	6
140-74306	52	48
140-74405	52	53
140-75055	44	1
140-75154	44	2
140-75253	46	17
140-75352	46	1
140-75451	42	3
140-75550	44	4
140-75659	44	5
140-75758	42	4
140-75857	52	28
140-75956	52	29
140-76053	52	30
140-76152	52	31
140-76251	52	32
140-76350	52	33
140-76459	52	34
140-76558	52	35
140-76657	52	36
140-76756	52	37
140-76855	52	38
140-76970	44	3
140-77051	42	5
140-77150	56	51
140-77168	56	53
161-88153	54	14
163-68508	2	41
170-07402	50	16
178-45108	52	7
178-50603	32	12
240-12106	42	12

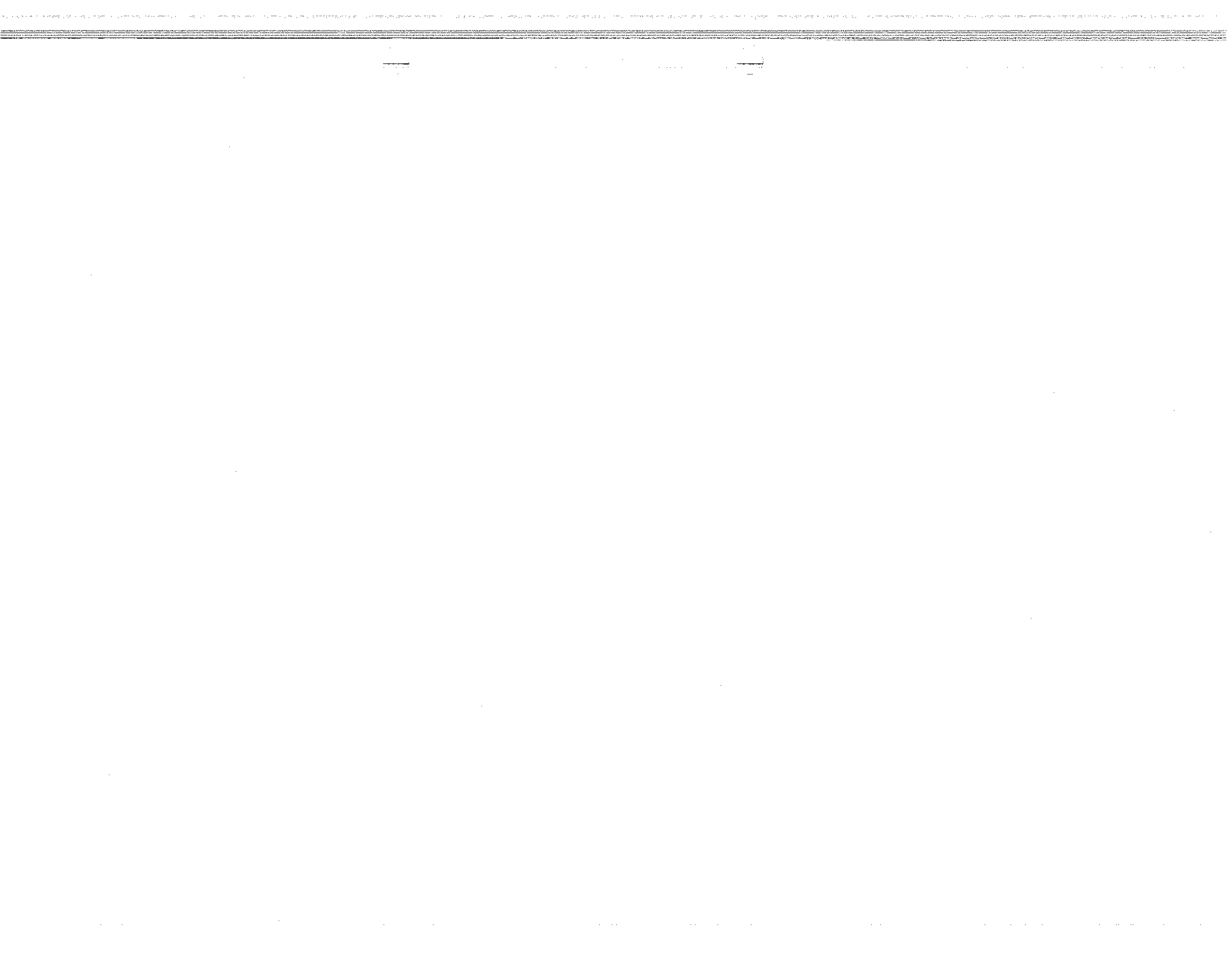

JUKI®

JUKI 株式会社

JUKI CORPORATION

お買い求め、ご相談は
To order or for further
information,
please contact :

※このパーツリストは商品改良のため予告なく変更する事があります。
＊The description covered in this parts list is subject to change for improvement of the commodity without notice.
※このパーツリストは、1996年2月 現在の商品仕様で編集したものです。
＊This parts list is edited in accordance with the product specifications as of February 1996.

96•03 Printed in Japan